Clippard

SPIDER TECHNOLOGY



What is **Spider Technology**?

In 1973, Clippard patented a new valve design that utilized a unique sealing mechanism to improve performance and reliability. The design was a significant advancement and helped establish Clippard as a leading innovator in the field of pneumatic control. It featured a seal that was held in place by a very special spring, which consisted of a central plunger surrounded by several magnetically-responsive "legs" that moved in response to changes in pressure. When the valve was actuated, the legs moved outward, creating an opening that enabled media to flow through. It became known as the Clippard "spider."

This technology has since been copied and mimicked by other manufacturers, but none have come close to perfecting it. Today, Clippard's EV series—the original "spider" valve—remains the industry standard for long life and low leak. Building on this legacy, Clippard offers a wide range of valves that utilize this tried-and-true spider technology to meet the needs of many different industries and applications. All Clippard spider valves are extremely low leak. They provide exceptional reliability; long lifespans; and fast, precise control. They also consume very little power and have minimal internal volume.

Spider valves are well-suited for a broad range of medical, analytical, and niche industrial applications including biomedical, dental, test equipment, oxygen control, textile, packaging, pressure control, automation and portable systems.



What Are the Benefits of a **Spider Valve** vs. a **Solenoid Valve**?

- **Longer life**—*1,000,000,000+ cycles*
- **Lower vibration and noise**
- **Lower power**
- **Faster response time**
- **More compact and lightweight**
- **Less internal volume**
- **Better leak resistance**

Page #	Height	Wattage	Max. Flow	Response Time	
EV Series					
p. 6	1.560"	0.67	17 l/min @ 100 psig (7 bar)	5 to 10 ms	
ES Series					
p. 22	0.980"	1.0	17 l/min @ 100 psig (7 bar)	5 to 10 ms	
EHS Series					
p. 24	1.280"	1.0	58 l/min @ **1,000 psig (70 bar)**	10 to 15 ms	
SV Series					
p. 26	0.645"	0.5	12 l/min @ 100 psig (7 bar)	< 5 ms	
ST Series					
p. 28	0.740"	0.5	5.4 l/min @ 100 psig (7 bar)	< 5 ms	
DV Series					
p. 30	1.875"	1.9	100 l/min @ 100 psig (7 bar)	10 to 15 ms	

The EV Series

Standard

2-way and 3-way manifold and in-line mounting. Normally-closed and universally ported versions.

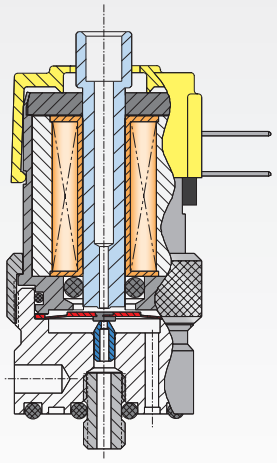

p. 6

Electroless nickel-plated steel housing and core

Nitrile seals standard

Electroless nickel-plated brass body

Stainless steel stud and nozzle

High Pressure

Precision-built 2-way control valves that accept low voltage, low current signals and convert them to high pressure (500 psig) pneumatic outputs.

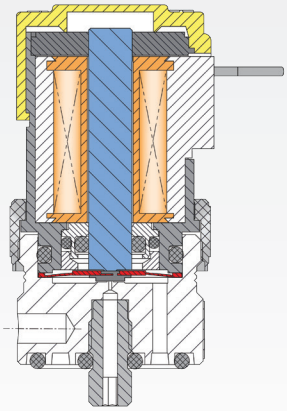

p. 12

Electroless nickel-plated steel housing and core

Nitrile seals standard

Electroless nickel-plated brass body

Stainless steel stud and nozzle

Oxygen Clean

Manufactured and assembled for use in oxygen-enriched environments for applications that are extremely sensitive to contamination.

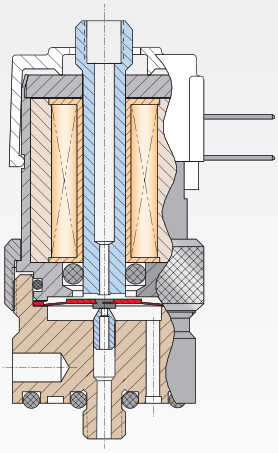

p. 14

Integral fitting and stud

No thread sealant

All wetted parts cleaned to meet and/or exceed ASTM G93 Level E NVR and Level 500 Particulate and Fibers

Electroless nickel-plated steel housing and core

FKM seals

Stainless steel nozzle

Electroless nickel-plated brass body

PFPE lubricant

Analytical

Designed for applications where cleanliness is especially important. Utilizes special materials, processes, and strict quality standards to achieve the highest levels of cleanliness and ultra low leak rates.

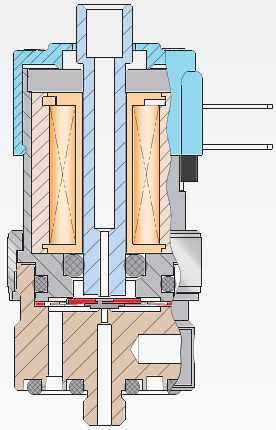

p. 16

Integral fitting

No anaerobic sealant

Larger cross section o-ring improves sealing

Cleaned to meet and/or exceed ASTM G93 Level E NVR and Level 500 Particulate and Fibers

One-piece base eliminates many leak points

Outgassed FKM seals

Corrosion-Resistant

2-way and 3-way manifold and in-line mounting. Normally-closed and universally ported versions. Optimized for applications where corrosion resistance is important.

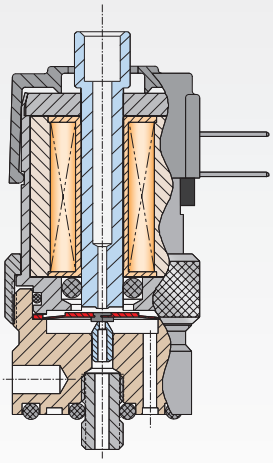

p. 18

Stainless steel housing and core

Nitrile seals standard

Electroless nickel-plated spider

Electroless nickel-plated brass body

N.O. Manifold

Normally-open, manifold mount to allow normally-closed and normally-open valves on the same manifold.

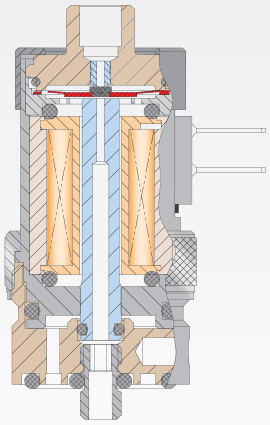

p. 20

Integral fitting

Spider above coil

Mounts side-by-side with normally-closed version

EV SERIES ELECTRONIC VALVES

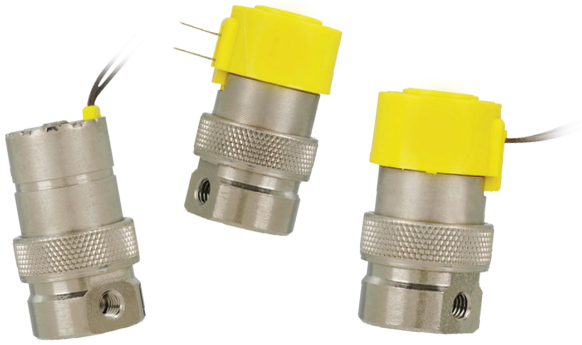

Clippard's original EV series valve design is a deceptively simple arrangement featuring a remarkably quiet, low power operation. The Clippard "spider" is the only moving part, and its motion to operate the valve is a mere 0.007" travel. As a result, this valve features an exceptionally long life—proven to last over 1,000,000,000+ cycles. Low voltage DC inputs move the spider, generating extremely fast response times of 5 to 10 milliseconds while using only 0.67 watts of power. The EV series is cool running and its compact, lightweight design makes it easy to mount in small spaces.

Also available in high flow, oxygen clean, analytical, corrosion-resistant, N.O. manifold, and proportional versions.

TYPICAL FLOW

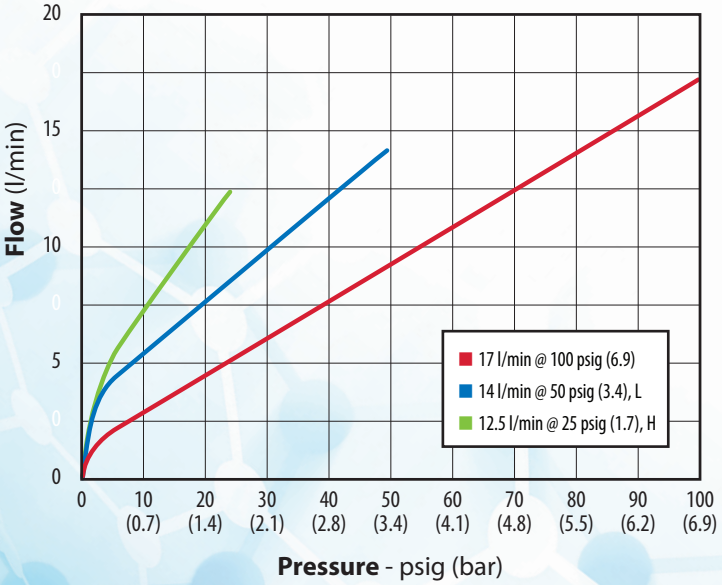

Coil Resistance	218 (12V), 864 (24V)
Connection	Pin connector, spade terminals, radial wire leads, or axial wire leads
Current	0.055A (12V), 0.028A (24V)
Cycle Life	>1,000,000,000 *(ideal applications)*
Filtration	40 micron filter *(recommended)*
Function	2-way normally-open or normally-closed; 3-way normally-open, normally-closed, or universally ported
Leak Rate	0.1 sccm
Material, Body	Nickel-plated brass, ENP carbon steel, nickel iron alloy, 300 series stainless steel
Material, Seals	Nitrile standard; FKM, EPDM[1] and silicone[1] available
Material, Spring	Nickel alloy
Material, Wetted	ENP brass, nickel alloy, stainless steel, ENP steel
Max. Flow	17 l/min @ 100 psig (7 bar), 14 l/min @ 50 psig (3.4 bar), or 12.5 l/min @ 25 psig (1.7 bar)
Max. psig	105 (7.2 bar)
Medium	Clean, dry air and compatible gases
Mount	In-line or manifold
Number of Ports	2 or 3
Operating Pressure	28" Hg to 25, 50, or 100 psig (1.7, 3.4, or 7 bar)
Operating Temp. Range	32 to 180˚F (0 to 82˚C)
Orifice	0.060", 0.040", or 0.025" (1.52, 1.02, or 0.64 mm)
Port, Exhaust	#10-32 or M5 (3-way)
Port, Inlet	**Manifold:** #10-32 or M5 male stud **In-Line:** #10-32 or M5 female
Port, Outlet	#10-32 or M5 (in-line)
Response Time	5 to 10 ms (nominal) @ 25 psig (1.7 bar)
Voltage	12 or 24 VDC
Voltage Operating Range	90 to 150%
Wattage	0.67 watts (nominal)
More Details	**clippard.com/link/ev-series**

[1]*Minimum order quantity required*

Does your application have requirements beyond what is listed? Contact Clippard to discuss how this valve can be modified to meet your specific needs.

Inline Mount

2-Way, 3-Way, and 3-Way Universally Ported

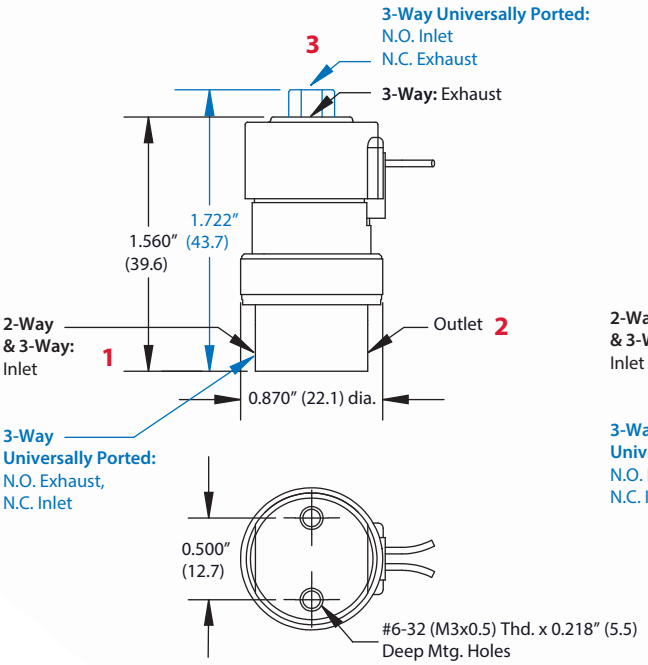

Manifold Mount

2-Way, 3-Way, and 3-Way Universally Ported

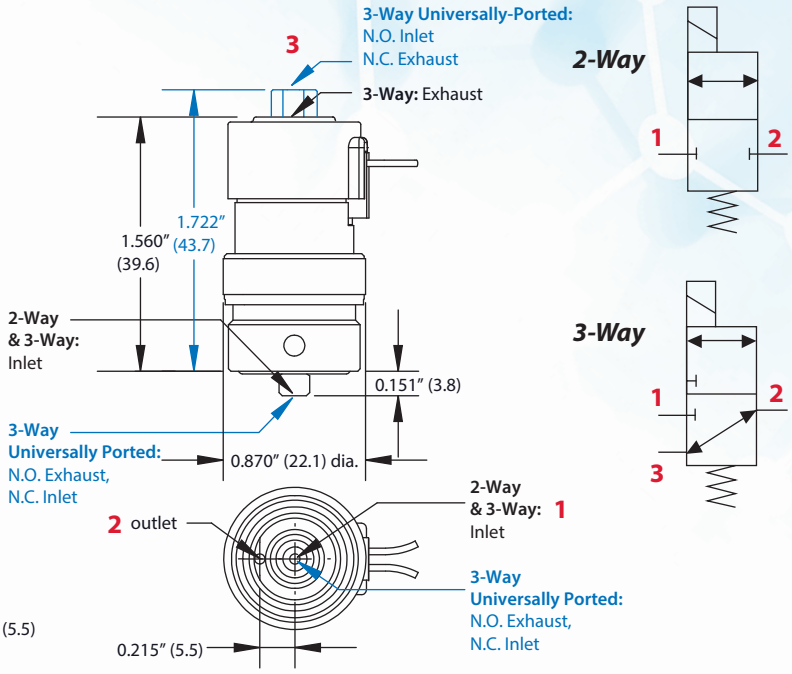

Dimensions shown are in inches (millimeters listed in parentheses).
Visit clippard.com for more detailed 2D and 3D drawings.

ORDERING INFORMATION

❑ **E** ❑ ❑ - ❑ ❑ - ❑ ❑ ❑ ❑

Connection

C	Pin Connector
T	Spade Terminals
V	Radial Wire Leads
W	Axial Wire Leads

Function

2	2-Way
3	3-Way

Mounting

(blank)	In-Line (#6-32 or M3)
M	Manifold

Voltage

12	12 VDC
24	24 VDC

Seals

(blank)	Nitrile
V	FKM
E	EPDM[1]
S	Silicone[1]

Units

(blank)	Imperial
M-	Metric

Top Port

(blank)	No Top Port
0	#10-32 or M5 Female

Pressure Range

(blank)	Vac. to 105 psig - *17 l/min @ 100 psig (7 bar)*
L	Vac. to 50 psig - *14 l/min @ 50 psig (3.4 bar)*
H	Vac. to 25 psig - *12.5 l/min @ 25 psig (1.7 bar)*

Options

(blank)	None
D	Diode[2]
K	Krytox Lube

[1] *Minimum order quantity required*
[2] *Available on pin connector (EC) models only*

Example Part Number:
EC-3-12

For more info, scan the QR code or visit
clippard.com/link/ev-series

EFB SERIES FILL & BLEED CIRCUITS



A fill and bleed circuit is a combination of pneumatic valve components used to inflate a volume or apparatus in one controllable function and to release or vent pressure in a second controllable function. Fill and bleed circuits are commonly used in many applications where a particular pressure, firmness, or position can be controlled with the addition or venting of pressure.

- **Compact, robust design**
- **Extremely fast response**
- **Exceptionally long life**
- **Multiple flow and pressure options**

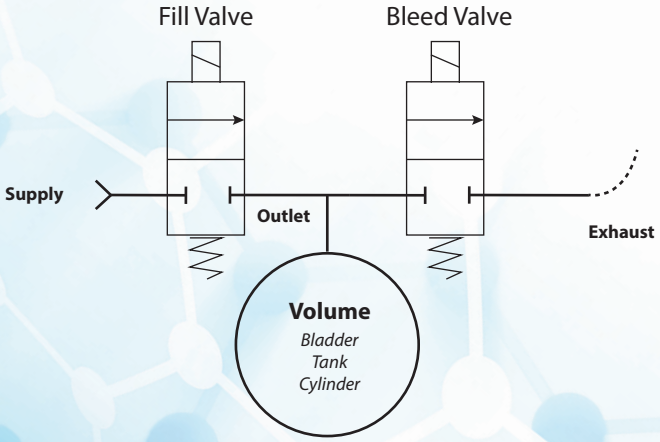

Material, Body	Black anodized aluminum
Connection	Wire leads
Medium	Clean, dry air and compatible gases
Mount	In-line or manifold

EV Valve Version *(See EV Series for more specifications)*

Material, Body	Nickel-plated brass, ENP carbon steel, nickel iron alloy, 300 series stainless steel
Material, Seals	Nitrile standard; FKM, EPDM[1] and silicone[1] available
Material, Spring	Nickel alloy
Material, Wetted	ENP brass, nickel alloy, stainless steel, ENP steel
Max. psig	105 (7.2 bar)
Operating Pressure	28" Hg to 25, 50, or 100 psig (1.7, 3.4, or 7 bar)
Operating Temp. Range	32 to 180˚F (0 to 82˚C)
Response Time	5 to 10 ms (nominal) @ 25 psig (1.7 bar)
Voltage Op. Range	90 to 150%
Wattage	0.67 watts (nominal)

DV Valve Version *(See DV Series for more specifications)*

Material, Body	Stainless steel
Material, Seals	Nitrile standard; FKM, EPDM and silicone available
Material, Spring	Stainless steel
Material, Wetted	Polyetherimide, stainless steel, PPS
Max. psig	100 (6.9 bar)
Operating Pressure	28" (71 cm) Hg vac. to 50 or 100 psig (3.4 or 7 bar)
Operating Temp. Range	32 to 130˚F (0 to 54˚C)
Response Time	10 to 15 ms
Voltage Op. Range	95 to 125%
Wattage	1.9 watts

More Details	**clippard.com/link/efb**

Version 1

In-Line



Version 2

Manifold



Dimensions shown are in inches (millimeters listed in parentheses).

Visit clippard.com for more detailed 2D and 3D drawings.

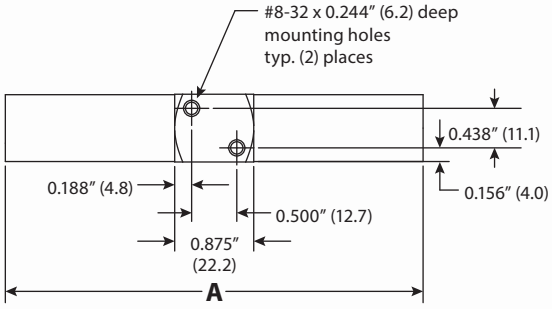

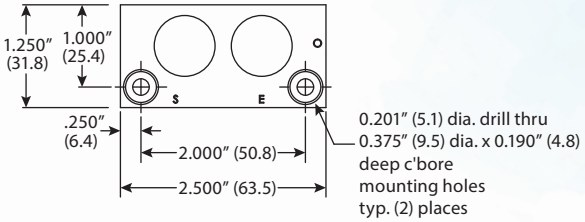

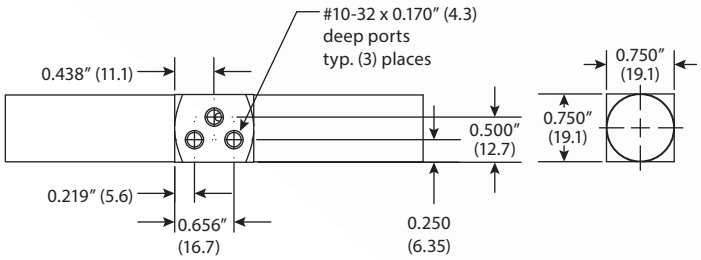

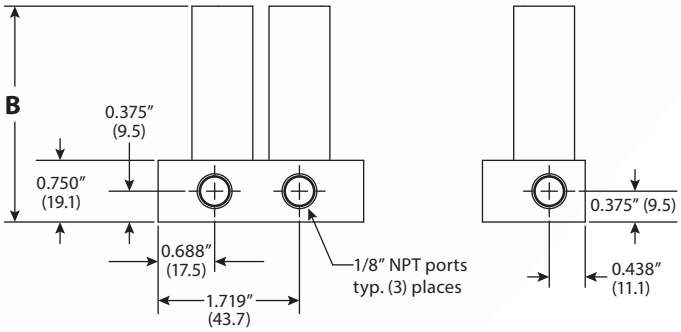

ORDERING INFORMATION

E F B - ❑ ❑ - ❑ - ❑

Version

1	
2	

Valve Series

M	Manifold only	(blank)
DV	DV Series	(blank) 100 l/min @ 100 psig
		L 80 l/min @ 50 psig
EV	EV Series	(blank) 17 l/min @ 100 psig
		L 14 l/min @ 50 psig
		H 13 l/min @ 25 psig

Voltage

12	12 VDC
24	24 VDC

Flow

Example Part Number:
EFB-1DV-12-L

For more info, scan the QR code or visit
clippard.com/link/efb

EV VALVE **BOOSTERS**



Function	2-way or 3-way normally-closed
Material, Body	Nickel-plated brass, acetal, stainless steel
Material, Seals	Nitrile
Max. Flow	176 l/min @ 100 psig (7 bar)
Medium	Air
Operating Pressure	20 to 150 psig (1.4 to 10.3 bar)
Ports	Inlet and outlet through manifold
Response Time	20 ms @ 20 psig (1.4 bar) 13 ms @ 100 psig (7 bar) nominal
Temperature Range	30 to 180˚F (-1 to 82˚C)
More Details	clippard.com/link/evb

Use only normally-closed 3-way pilot valves in conjunction with this booster.

These pressure piloted manifold mount valves are designed to fit the standard footprint of the EV valve and to be piloted by a manifold mount 3-way Clippard EV valve (not included). Output from the valve actuates the booster to produce outputs up to 175 l/min at 100 psig (7 bar). The EVB combines the low wattage, long life, and cool running of the EV valve with quick response and high flow.

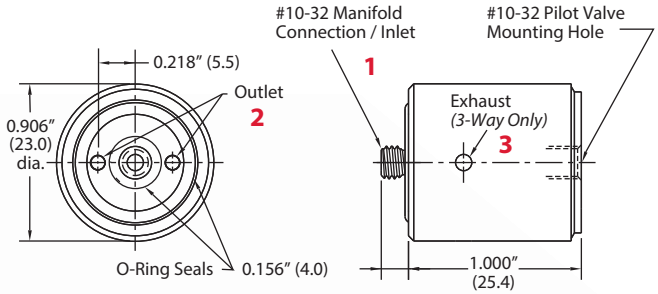

Dimensions shown are in inches (millimeters listed in parentheses).

Visit clippard.com for more detailed 2D and 3D drawings.

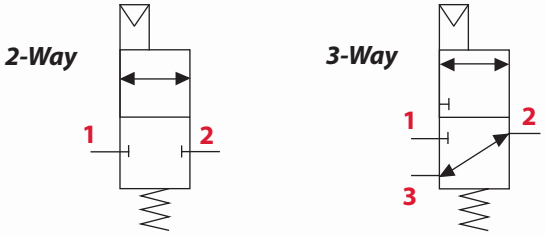

ORDERING INFORMATION

❑ E V B - ❑

Unit

(blank)	Imperial
M-	Metric

Function

2	2-Way Valve Booster
3	3-Way Valve Booster

Example Part Number:
EVB-2



Function	3-way normally-closed
Material, Body	Anodized aluminum, stainless steel
Material, Seals	Nitrile
Max. Flow	620 l/min @ 100 psig (7 bar)
Medium	Air
Operating Pressure	30 to 100 psig (2 to 7 bar)
Pilot Pressure	60% of supply pressure
Ports	Inlet and outlet, exhaust 1/8" NPT; pilot supply on 2020 is #10-32 female
Response Time	20 ms
More Details	clippard.com/link/evb

Use only normally-closed 3-way pilot valves in conjunction with these boosters.

These pressure piloted valves are designed to be piloted by a manifold mount Clippard EV valve (not included). Output from the valve actuates the booster to produce outputs up to 620 l/min at 100 psig (7 bar). Combines low wattage, long life, and cool running of the EV valve with quick response and high flow. Available internally or externally piloted.

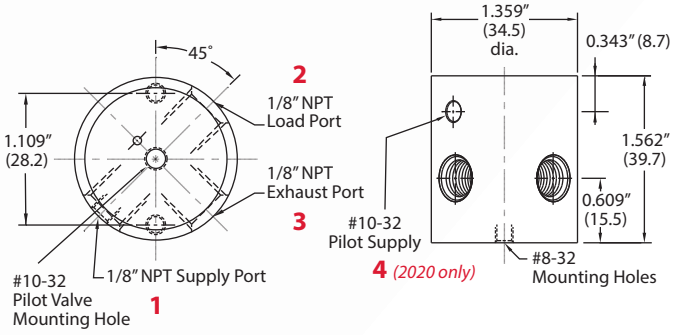

Dimensions shown are in inches (millimeters listed in parentheses).

Visit clippard.com for more detailed 2D and 3D drawings.

2020

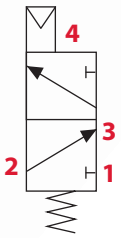

2021

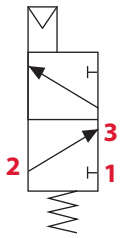

ORDERING INFORMATION

❑ 2 0 2 ❑

Unit

(blank)	Imperial
M-	Metric

Version

0	Internally Piloted Valve
1	Externally Piloted Valve with #10-32 Pilot

Example Part Number:
2020

For more info, scan the QR code or visit
clippard.com/link/efb

HIGH PRESSURE EV SERIES



Clippard's EHV series are a high pressure version of the renowned EV series. They are precision-built 2-way control valves that accept low voltage, low current signals and convert them to high pressure (500 psig, 34.5 bar) pneumatic outputs. Like the orginal EV series, EHV series valves consume very little power and provide exceptionally long life. In addition, they are small in size, quiet, and produce very little heat. These features make them well-suited for a wide range of applications across a broad spectrum of industries.

TYPICAL FLOW

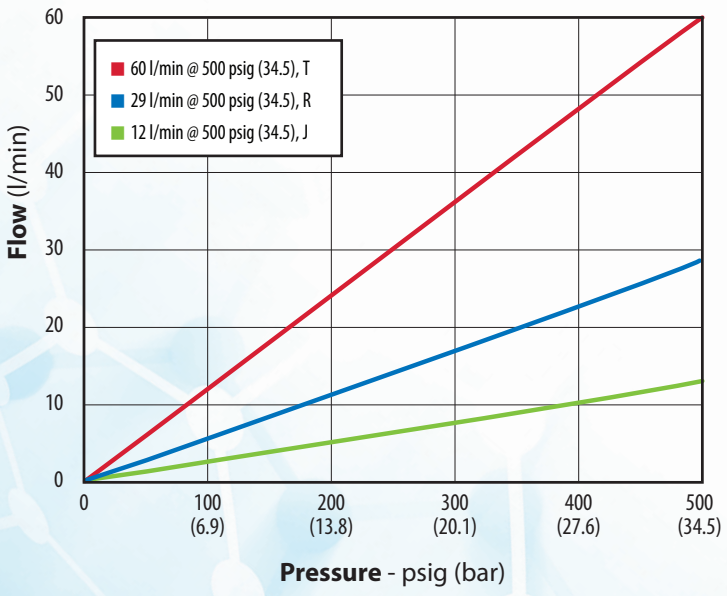

Coil Resistance	218 (12V), 864 (24V)
Connection	Pin connector, spade terminals, or radial wire leads
Current	0.055A (12V), 0.028A (24V)
Filtration	40 micron filter *(recommended)*
Function	2-way normally-closed *(monodirectional)*
Material, Body	Nickel alloy, stainless steel, ENP steel
Material, Seals	Nitrile standard; FKM and EPDM[1] available
Material, Spring	Nickel alloy
Material, Wetted	Nickel alloy, stainless steel, ENP steel
Max. Flow	12, 29, or 60 l/min @ 500 psig (34.5 bar)
Max. psig	500 (34.5 bar)
Medium	Clean, dry air and compatible gases
Mount	Manifold
Number of Ports	2
Operating Pressure	Vac. to 500 psig (34.5 bar)
Operating Range	90 to 150% of rated voltage
Operating Temp. Range	32 to 180˚F (0 to 82˚C)
Orifice	0.009", 0.013", or 0.020" (0.23, 0.33, or 0.51 mm)
Port, Inlet	#10-32 male or M5
Port, Outlet	#10-32 or M5 (in-line)
Response Time	5 to 10 ms (nominal)
Voltage	12 or 24 VDC
Voltage Operating Range	90 to 150%
Wattage	0.67 watts (nominal)
More Details	**clippard.com/link/ehv-series**

[1]*Minimum order quantity required*

Does your application have requirements beyond what is listed? Contact Clippard to discuss how this valve can be modified to meet your specific needs.

Manifold Mount

2-Way

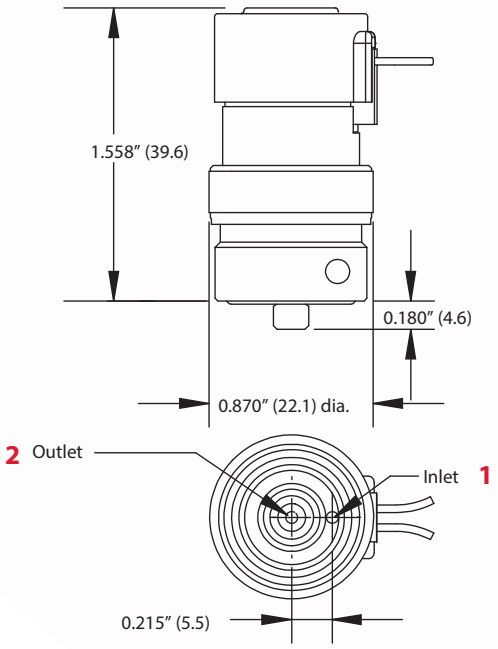



EHV series valves are the "heart" of Clippard's CHP series high pressure electronic regulator.

- **Extremely small dead volume**
- **Low vibration and noise**
- **Fast response time**
- **Low energy consumption**
- **Exceptional repeatability and reliability**
- **Compact and ideal for sub-assemblies**
- **100% tested**

2-Way

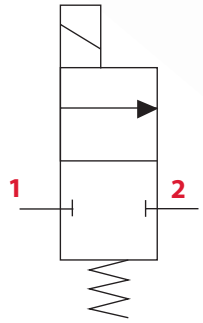

Dimensions shown are in inches (millimeters listed in parentheses). Visit clippard.com for more detailed 2D and 3D drawings.

ORDERING INFORMATION

❑ E H ❑ - 2 M - ❑ - ❑ ❑

Units

(blank)	Imperial
M-	Metric

Connection

C	Pin Connector
T	Spade Terminals
V	Radial Wire Leads

Voltage

12	12 VDC
24	24 VDC

Flow*

T	60 l/min
R	29 l/min
J	12 l/min

*@ 500 psig (34.5 bar)

Seals

(blank)	Nitrile
-V	FKM
-E	EPDM

Example Part Number:
EHC-2M-12-T

For more info, scan the QR code or visit ***clippard.com/link/ehv-series***

OXYGEN CLEAN EV SERIES

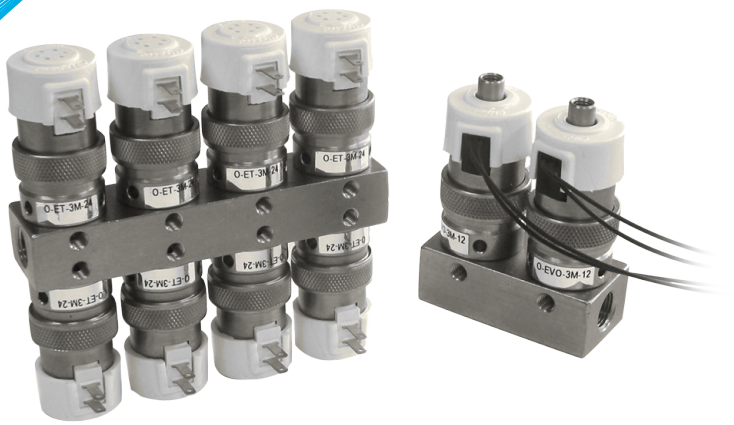

For applications that are particularly sensitive to contamination, Clippard's EV series valves are also available in an oxygen clean version. Oxygen clean EV valves are manufactured and assembled using a special cleaning process that includes:

- Ultrasonic cleaning, assembly, inspection, and testing in one of Clippard's ISO 7 (class 10,000) rated clean rooms
- All wetted parts cleaned to meet and/or exceed ASTM G93 Level E NVR and Level 500 Particulate and Fibers
- No organic sealants, adhesives, or lubricants used in the manufacturing process
- Component parts lubricated with oxygen-compatible PFPE grease *(only as needed for assembly)*
- Invididual testing and inspection utilizing compressed Nitrogen and ultra-violet light

TYPICAL FLOW

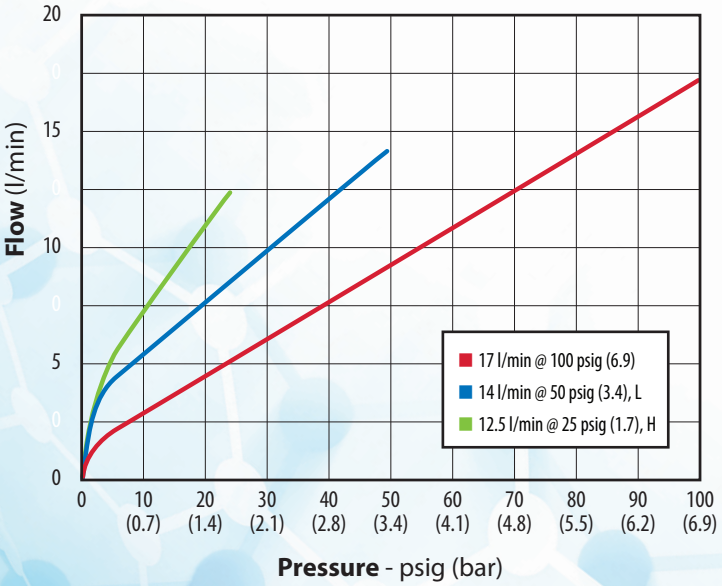

Coil Resistance	218 (12V), 864 (24V)
Connection	Pin connector, spade terminals, radial wire leads, or axial wire leads
Current	0.055A (12V), 0.028A (24V)
Cycle Life	>1,000,000,000 *(ideal applications)*
Filtration	40 micron filter *(recommended)*
Function	2-way normally-open or normally-closed; 3-way normally-open, normally-closed, or universally ported
Leak Rate	0.1 sccm
Material, Body	Nickel-plated brass, ENP carbon steel, nickel iron alloy, 300 series stainless steel
Material, Seals	FKM
Material, Spring	Nickel alloy
Material, Wetted	ENP brass, nickel alloy, stainless steel, ENP steel
Max. Flow	17 l/min @ 100 psig (7 bar), 14 l/min @ 50 psig (3.4 bar), or 12.5 l/min @ 25 psig (1.7 bar)
Max. psig	105 (7.2 bar)
Medium	Clean, dry air and compatible gases
Mount	In-line or manifold
Number of Ports	2 or 3
Operating Pressure	28" Hg to 25, 50, or 100 psig (1.7, 3.4, or 7 bar)
Operating Range	90 to 150% of rated voltage
Operating Temp. Range	32 to 180˚F (0 to 82˚C)
Orifice	0.060", 0.040", or 0.025" (1.52, 1.02, or 0.64 mm)
Port, Exhaust	#10-32 or M5
Port, Inlet	**Manifold:** #10-32 male or M5 **In-Line:** #10-32 female or M5
Port, Outlet	#10-32 or M5 (in-line)
Response Time	5 to 10 ms (nominal) @ 25 psig (1.7 bar)
Voltage	12 or 24 VDC
Voltage Operating Range	90 to 150%
Wattage	0.67 watts (nominal)
More Details	clippard.com/link/ev-series

[1]*Minimum order quantity required*

Does your application have requirements beyond what is listed? Contact Clippard to discuss how this valve can be modified to meet your specific needs.

Inline Mount

2-Way, 3-Way, and 3-Way Universally Ported

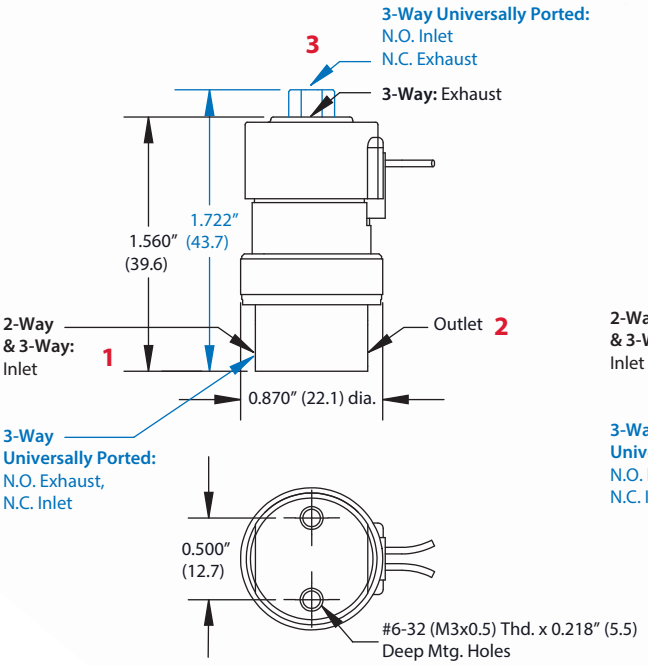

Manifold Mount

2-Way, 3-Way, and 3-Way Universally Ported

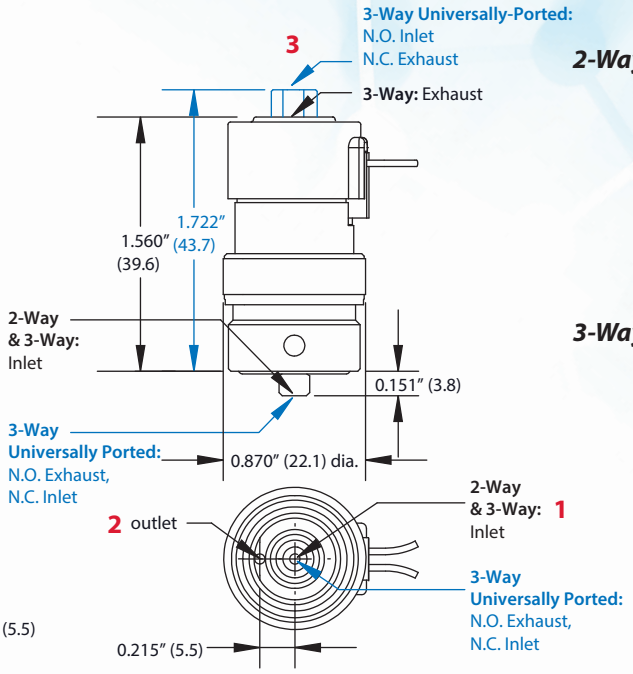

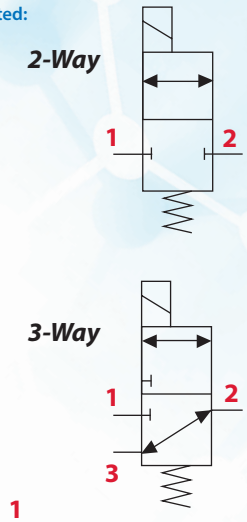

Dimensions shown are in inches (millimeters listed in parentheses).
Visit clippard.com for more detailed 2D and 3D drawings.

ORDERING INFORMATION

❑ O - E ❑ ❑ - ❑ ❑ - ❑ ❑ - ❑

Units

(blank)	Imperial
M-	Metric

Connection

C	Pin Connector
T	Spade Terminals
V	Radial Wire Leads
W	Axial Wire Leads

Top Port

(blank)	No Top Port
0	#10-32 or M5 Female

Function

2	2-Way
3	3-Way

Mounting

(blank)	In-Line
M	Manifold

Voltage

12	12 VDC
24	24 VDC

Pressure Range

(blank)	Vac. to 105 psig - *17 l/min @ 100 psig (7 bar)*
L	Vac. to 50 psig - *14 l/min @ 50 psig (3.4 bar)*
H	Vac. to 25 psig - *12.5 l/min @ 25 psig (1.7 bar)*

Options

(blank)	None
D	Diode[1]

[1]*Available on pin connector (EC) models only*

Example Part Number:
0-EC-2-12

For more info, scan the QR code or visit
clippard.com/link/ev-series

ANALYTICAL EV SERIES

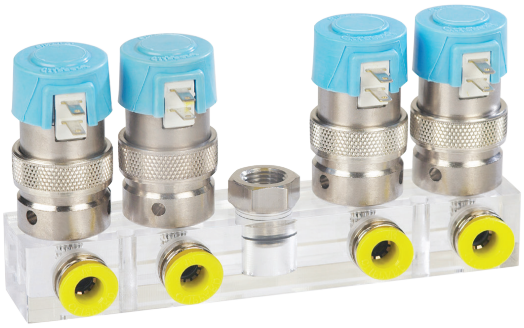

Clippard's EV series valves are also available in an analytical version that is ideal for applications that are particularly sensitive to cleanliness and outgassing from the valve. Analytical series EV valves are manufactured and assembled using an optimized process which includes:

- Ultrasonic cleaning, assembly, inspection, and testing in one of Clippard's ISO 7 (class 10,000) rated clean rooms
- Cleaned to meet and/or exceed ASTM G93 Level E NVR and Level 500 Particulate and Fibers
- No sealants used in the assembly
- Parts lubed with isopropyl alcohol only for assembly
- Individual testing with bottled nitrogen

Also available in high flow, oxygen clean, corrosion-resistant, N.O. manifold, and proportional versions.

TYPICAL FLOW

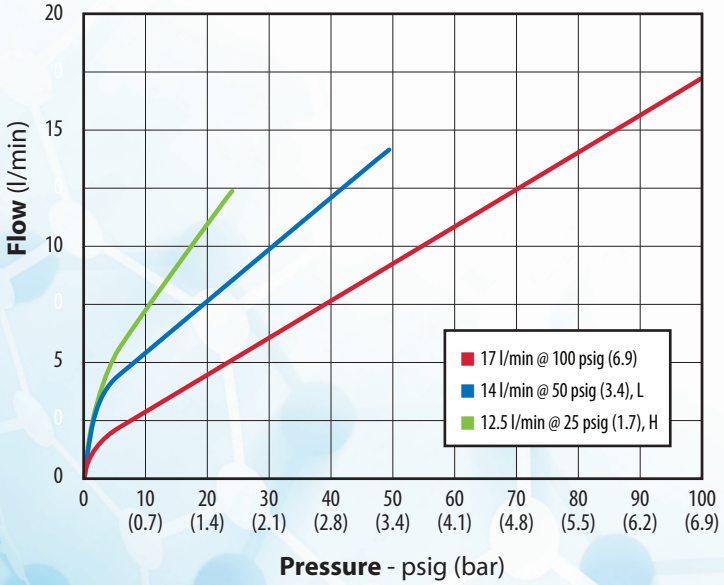

Coil Resistance	218 (12V), 864 (24V)
Connection	Pin connector, spade terminals, radial wire leads, or axial wire leads
Current	0.055A (12V), 0.028A (24V)
Cycle Life	>1,000,000,000 *(ideal applications)*
Filtration *(recommended)*	40 micron filter *(recommended)*
Function	2-way normally-open or normally-closed; 3-way normally-open, normally-closed, or universally ported
Leak Rate	0.1 sccm
Material, Body	Nickel-plated brass, ENP carbon steel, nickel iron alloy
Material, Seals	FKM standard, EPDM[1] and silicone[1] available
Material, Spring	Nickel alloy
Material, Wetted	ENP brass, nickel alloy, ENP steel
Max. Flow	17 l/min @ 100 psig (7 bar), 14 l/min @ 50 psig (3.4 bar), or 12.5 l/min @ 25 psig (1.7 bar)
Max. psig	105 (7.2 bar)
Medium	Clean, dry air and compatible gases
Mount	Manifold
Number of Ports	2 or 3
Operating Pressure	28" Hg to 25, 50, or 100 psig (1.7, 3.4, or 7 bar)
Operating Range	90 to 150% of rated voltage
Operating Temp. Range	32 to 180˚F (0 to 82˚C)
Orifice	0.060", 0.040", or 0.025" (1.52, 1.02, or 0.64 mm)
Port, Exhaust	#10-32 or M5
Port, Inlet	**Manifold:** #10-32 male or M5 **In-Line:** #10-32 female or M5
Port, Outlet	#10-32 or M5 (in-line)
Response Time	5 to 10 ms (nominal) @ 25 psig (1.7 bar)
Voltage	12 or 24 VDC
Voltage Operating Range	90 to 150%
Wattage	0.67 watts (nominal)
More Details	clippard.com/link/ev-series

[1]*Minimum order quantity required*

Does your application have requirements beyond what is listed? Contact Clippard to discuss how this valve can be modified to meet your specific needs.

Manifold Mount

2-Way, 3-Way, and 3-Way Universally Ported

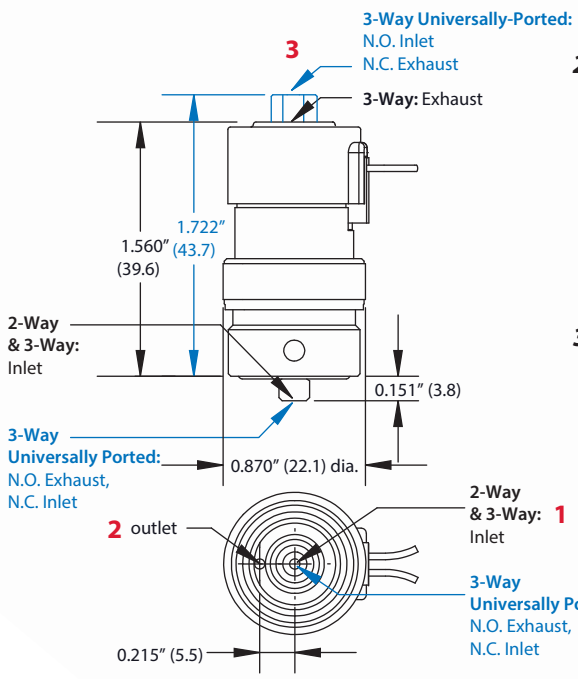

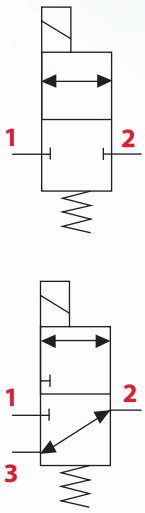

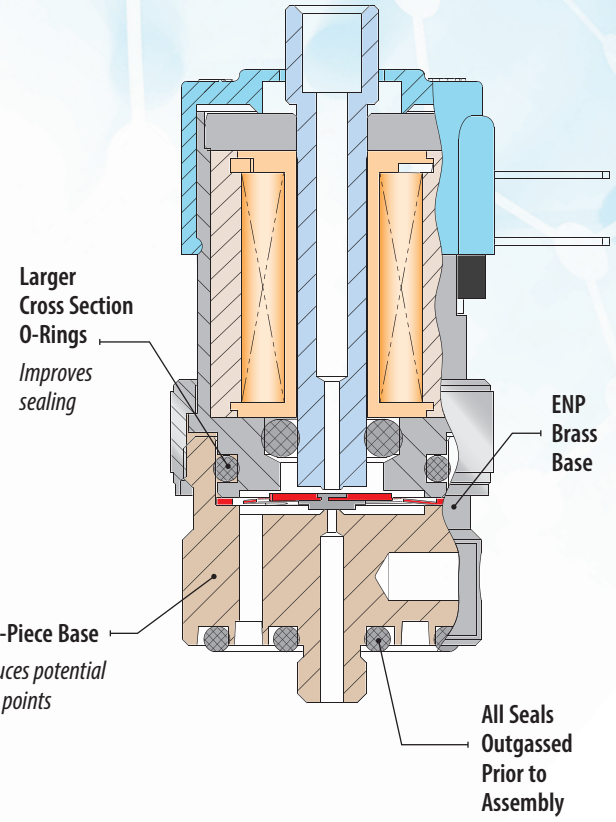

ORDERING INFORMATION

❑ A - E ❑ ❑ - ❑ M - ❑ ❑ ❑ ❑

Units

(blank)	Imperial
M-	Metric

Connection

C	Pin Connector
T	Spade Terminals
V	Radial Wire Leads
W	Axial Wire Leads

Top Port

(blank)	No Top Port
0	#10-32 or M5 Female

Function

2	2-Way
3	3-Way

Voltage

12	12 VDC
24	24 VDC

Pressure Range

(blank)	Vac. to 105 psig - *17 l/min @ 100 psig (7 bar)*
-L	Vac. to 50 psig - *14 l/min @ 50 psig (3.4 bar)*
-H	Vac. to 25 psig - *12.5 l/min @ 25 psig (1.7 bar)*

Seals

(blank)	FKM
-E	EPDM[1]
-S	Silicone[1]

Options

(blank)	None
-D	Diode[4]
-K	Krytox Lube

[1]*Minimum order quantity required*
[4]*Available on pin connector (EC) models only*

Example Part Number:
A-EC-2M-12

For more info, scan the QR code or visit
clippard.com/link/ev-series

CORROSION RESISTANT EV SERIES

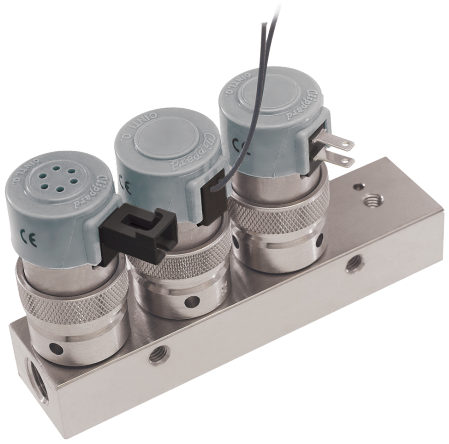

For applications that are susceptible to corrosion, the EV series is available in a special corrosion resistant version. The corrosion resistant series uses the same deceptively simple spider technology as the original EV series, but all the ENP steel components are swapped out for 430 stainless steel. The stainless steel components change the electrical characteristics by increasing the power consumption but do not affect the pressure or flow performance.

TYPICAL FLOW

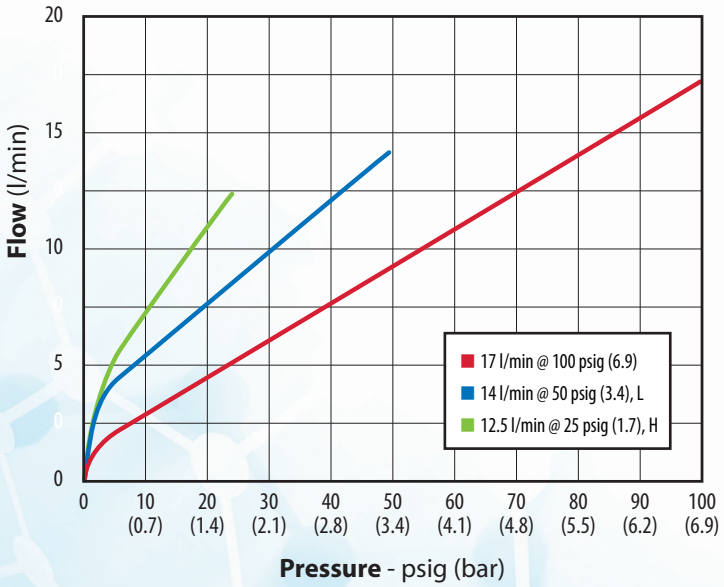

Coil Resistance	122 (12V), 486 (24V)
Connection	Pin connector, spade terminals, radial wire leads
Current	0.10A (12V), 0.05A (24V)
Cycle Life	>1,000,000,000 *(ideal applications)*
Filtration	40 micron filter *(recommended)*
Function	2-way normally-open or normally-closed; 3-way normally-open, normally-closed, or universally ported
Leak Rate	0.1 sccm
Material, Body	Nickel-plated brass, nickel iron alloy, 300 stainless steel, 430 stainless steel
Material, Seals	Nitrile standard; FKM, EPDM[1] and silicone[1] available
Material, Spring	ENP nickel alloy
Material, Wetted	ENP brass, ENP nickel alloy, 430 stainless steel
Max. Flow	17 l/min @ 100 psig (7 bar), 14 l/min @ 50 psig (3.4 bar), or 12.5 l/min @ 25 psig (1.7 bar)
Max. psig	105 (7.2 bar)
Medium	Clean, dry air and compatible gases
Mount	In-line or manifold
Number of Ports	2 or 3
Operating Pressure	28" Hg to 25, 50, or 100 psig (1.7, 3.4, or 7 bar)
Operating Range	90 to 110% of rated voltage
Operating Temp. Range	32 to 150˚F (0 to 65˚C)
Orifice	0.060", 0.040", or 0.025" (1.52, 1.02, or 0.64 mm)
Port, Exhaust	#10-32 or M5
Port, Inlet	**Manifold:** #10-32 male or M5 **In-Line:** #10-32 female or M5
Port, Outlet	#10-32 or M5 (in-line)
Response Time	5 to 10 ms (nominal) @ 25 psig (1.7 bar)
Voltage	12 or 24 VDC
Voltage Operating Range	90 to 110%
Wattage	1.2 watts (nominal)
More Details	clippard.com/link/ev-series

[1]*Minimum order quantity required*

Does your application have requirements beyond what is listed? Contact Clippard to discuss how this valve can be modified to meet your specific needs.

Inline Mount

2-Way, 3-Way, and 3-Way Universally Ported

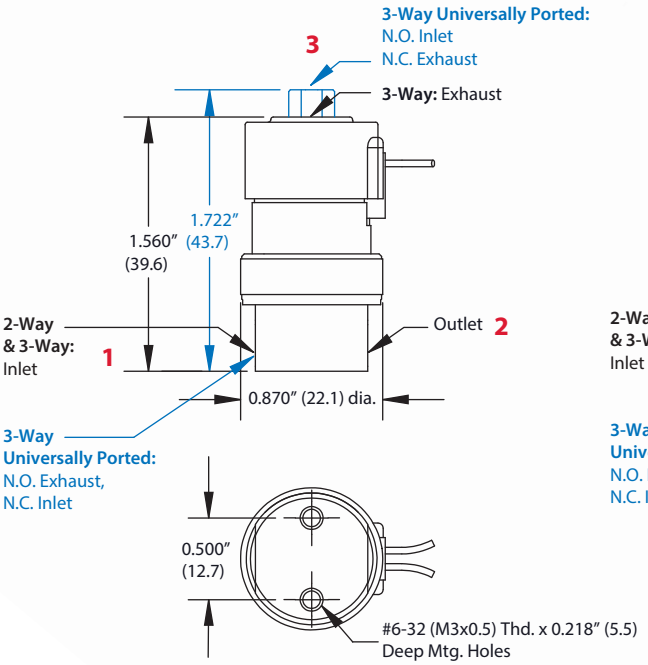

Manifold Mount

2-Way, 3-Way, and 3-Way Universally Ported

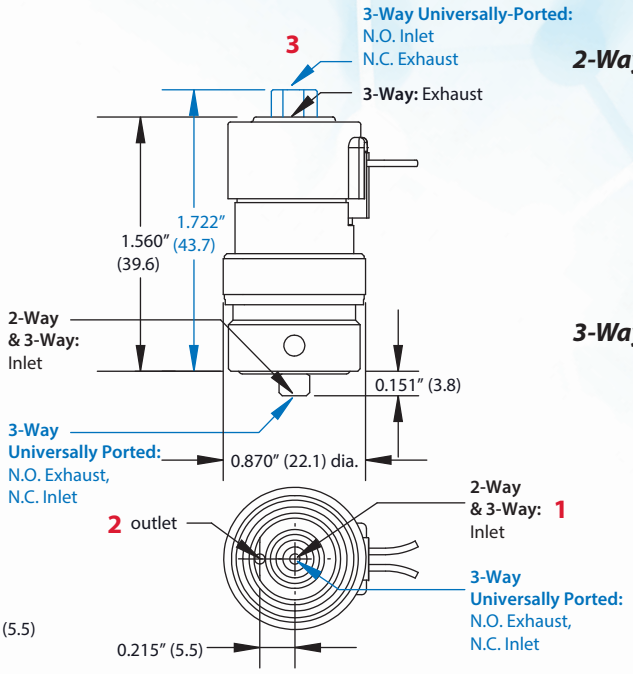

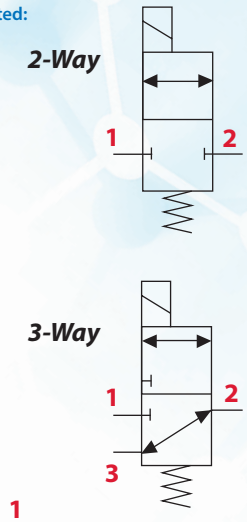

Dimensions shown are in inches (millimeters listed in parentheses).
Visit clippard.com for more detailed 2D and 3D drawings.

ORDERING INFORMATION

❑ C R - E ❑ ❑ - ❑ ❑ - ❑ ❑ ❑ ❑

Units

(blank)	Imperial
M-	Metric

Connection

C	Pin Connector
T	Spade Terminals
V	Radial Wire Leads

Top Port

(blank)	No Top Port
0	#10-32 or M5 Female

Function

2	2-Way
3	3-Way

Mounting

(blank)	In-Line
M	Manifold

Voltage

12	12 VDC
24	24 VDC

Pressure Range

(blank)	Vac. to 105 psig - *17 l/min @ 100 psig (7 bar)*
-L	Vac. to 50 psig - *14 l/min @ 50 psig (3.4 bar)*
-H	Vac. to 25 psig - *12.5 l/min @ 25 psig (1.7 bar)*

Seals

(blank)	Nitrile
-V	FKM
-E	EPDM[1]
-S	Silicone[1]

Options

(blank)	None
-D	Diode[2]
-K	Krytox Lube

[1] *Minimum order quantity required*
[2] *Available on pin connector (EC) models only*

Example Part Number:
CR-EC-2-12

For more info, scan the QR code or visit
clippard.com/link/ev-series

N.O. MANIFOLD EV SERIES



Clippard's normally-open series EV valves are ideal for applications where a manifold mount normally-open valve is required. The normally-open EV valve is a unique valve that offers the same low power and long life as the original EV series in a package that provides normally-open functionality.

TYPICAL FLOW

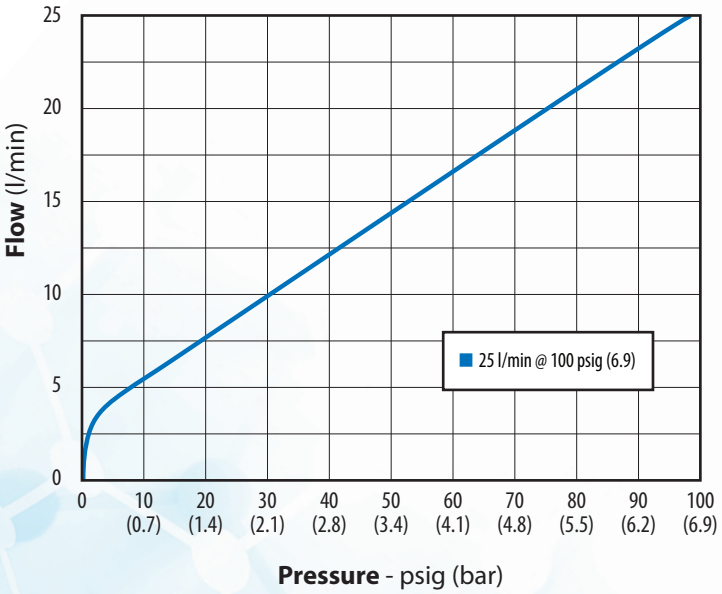

Coil Resistance	218 (12V), 864 (24V)
Connection	Pin connector, spade terminals or radial wire leads
Current	0.055A (12V), 0.028A (24V)
Cycle Life	>1,000,000,000 *(ideal applications)*
Filtration	40 micron filter *(recommended)*
Function	2-way normally-open or normally-closed; 3-way normally-open, normally-closed, or universally ported
Material, Body	Nickel-plated brass, ENP carbon steel, nickel iron alloy, 300 series stainless steel
Material, Seals	Nitrile standard; FKM, EPDM[1] and silicone[1] available
Material, Spring	Nickel alloy
Material, Wetted	ENP brass, nickel alloy, stainless steel, ENP steel
Max. Flow	25 l/min @ 100 psig (7 bar)
Max. psig	105 (7.2 bar)
Medium	Clean, dry air and compatible gases
Mount	Manifold
Number of Ports	2 or 3
Operating Pressure	100 psig (7 bar)
Operating Range	90 to 150% of rated voltage
Operating Temp. Range	32 to 180˚F (0 to 82˚C)
Orifice	0.040" (1.02 mm)
Port, Exhaust	#10-32 or M5
Port, Inlet	#10-32 male or M5
Port, Outlet	#10-32 or M5 (in-line)
Response Time	5 to 10 ms (nominal)
Voltage	12 or 24 VDC
Voltage Operating Range	90 to 150%
Wattage	0.67 watts (nominal)
More Details	clippard.com/link/ev-series

[1]*Minimum order quantity required*

Does your application have requirements beyond what is listed? Contact Clippard to discuss how this valve can be modified to meet your specific needs.

Manifold Mount

2-Way, 3-Way, and 3-Way Universally Ported

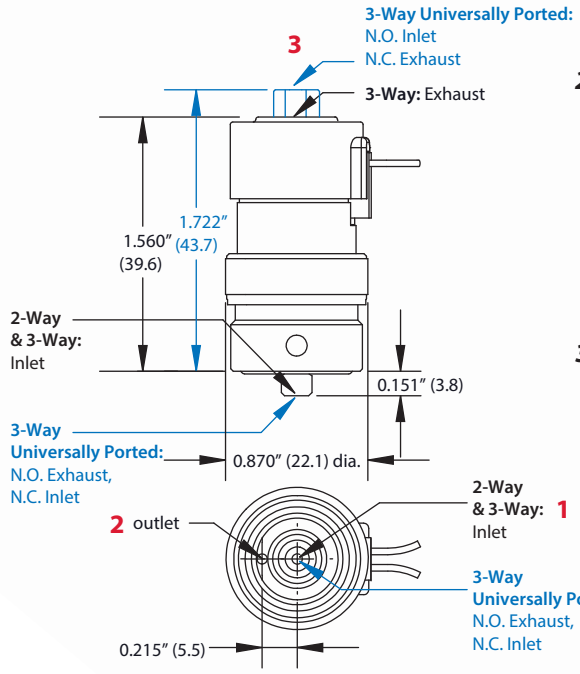

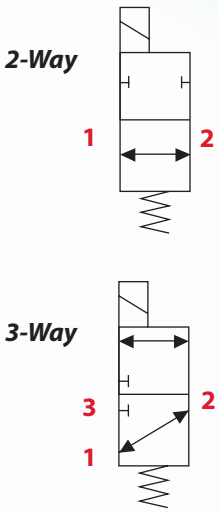

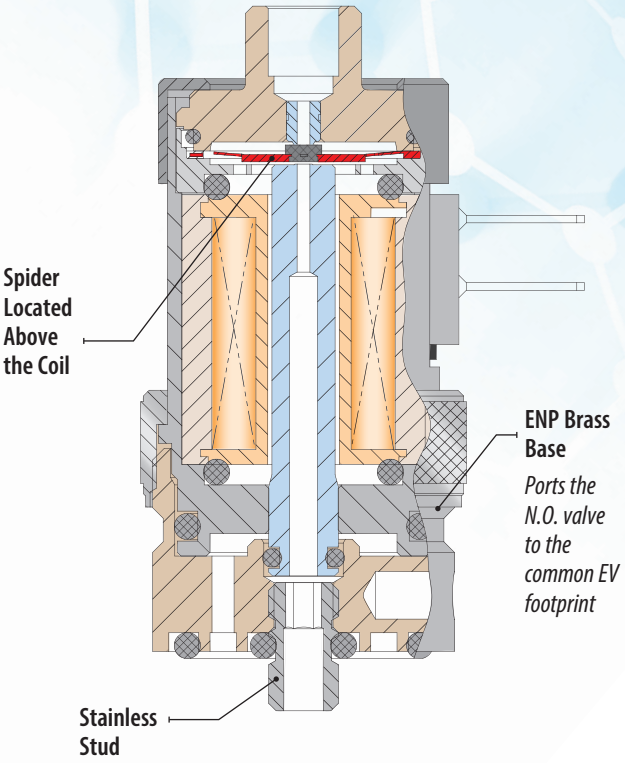

Dimensions shown are in inches (millimeters listed in parentheses).
Visit clippard.com for more detailed 2D and 3D drawings.

ORDERING INFORMATION

❑ - E ❑ N - ❑ M - ❑ - ❑ - ❑ ❑

Units

(blank)	Imperial
M-	Metric

Connection

C	Pin Connector
T	Spade Terminals
V	Radial Wire Leads

Function

2	2-Way
3	3-Way

Voltage

12	12 VDC
24	24 VDC

Pressure Range

(blank)	Vac. to 105 psig - *25 l/min @ 100 psig (7 bar)*

Seals

(blank)	Nitrile
V	FKM
E	EPDM[1]
S	Silicone[1]

Options

(blank)	None
-D	Diode[2]
-K	Krytox Lube

[1] *Minimum order quantity required*
[2] *Available on pin connector (ECN) models only*

Example Part Number:
ECN-2M-12

For more info, scan the QR code or visit
clippard.com/link/ev-series

ES SERIES ELECTRONIC VALVES



The ES series features large cross sectional o-rings, minimal leak points, and proven poppet designs. To reduce the possibility of contamination, all mounting hardware is located outside of the flow path and no internal parts are threaded during assembly. The ES has the best performance-to-price ratio for low leak valves. The compact footprint coupled with the long life, and exceptional leak resistance make the ES line suited to improve reliability in a wide range of applications.

TYPICAL FLOW

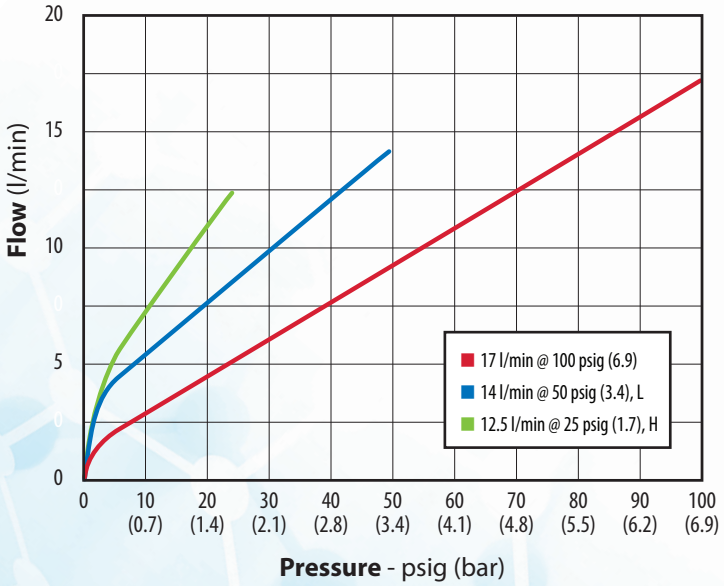

Coil Resistance	36 (6V), 144 (12V), 576 (24V)
Connection	Top terminal pins or radial wire leads
Current	017A (6V), 0.083A (12V), 0.042A (24V)
Cycle Life	Over 1 billion
Filtration *(recommended)*	40 micron
Function	2-way bidirectional; 3-way normally-closed or universally ported
Leak Rate	0.01 sccm
Material, Body	ENP carbon steel, nickel iron alloy, 300 series stainless steel, glass-filled nylon housing
Material, Seals	Nitrile standard; FKM and EPDM available
Material, Spring	Nickel alloy
Material, Wetted	Nickel alloy, stainless steel, ENP steel
Max. Flow	17 l/min @ 100 psig (7 bar) 14 l/min @ 50 psig (3.5 bar) 12.5 l/min @ 25 psig (1.7 bar)
Max. psig	105 (7.2 bar)
Medium	Clean, dry air and compatible gases
Mount	Manifold
Number of Ports	2 or 3
Operating Pressure	28" Hg Vac. to 25, 50, or 105 psig (700 mm Hg to 1.2, 3.4, or 7.2 bar)
Operating Temp. Range	32 to 150˚F (0 to 65˚C)
Port, Exhaust	**3-Way:** #10-32 or M5
Port, Inlet	No thread
Port, Outlet	No thread
Response Time	5 to 10 ms (nominal)
Thread	#4-40 or M3 (torque to 1-3 in-lb.)
Voltage	6, 12, or 24 VDC
Voltage Operating Range	90-120%
Wattage	1 watt (nominal)
More Details	**clippard.com/link/es-series**

[1]*Minimum order quantity required*

Does your application have requirements beyond what is listed? Contact Clippard to discuss how this valve can be modified to meet your specific needs.

Universally Ported

3-Way with Terminal Pins or Wire Leads

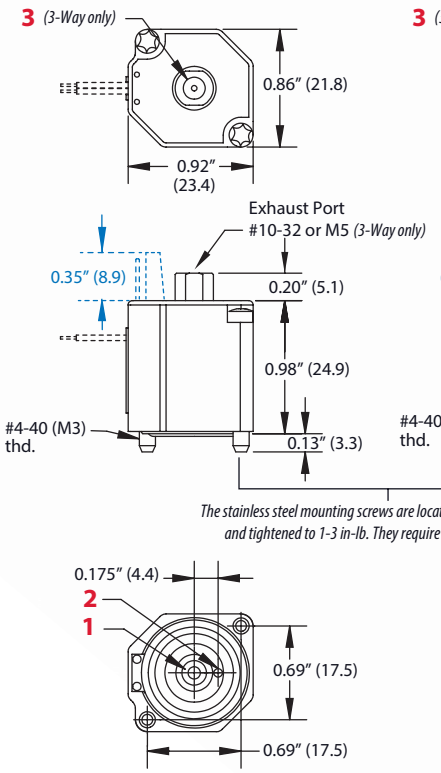

Normally Closed

2-Way or 3-Way with Terminal Pins or Wire Leads

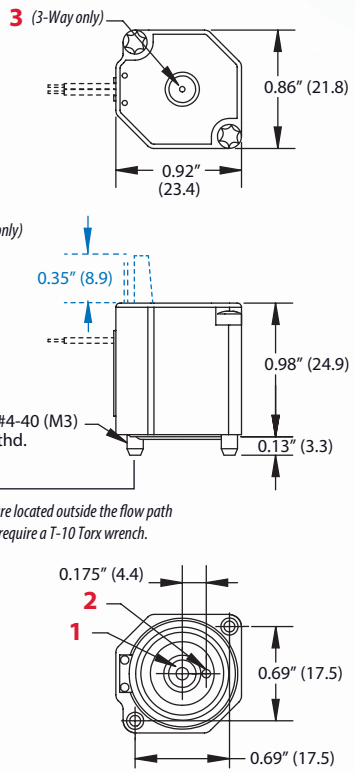

The stainless steel mounting screws are located outside the flow path and tightened to 1-3 in-lb. They require a T-10 Torx wrench.

Mounting Interface

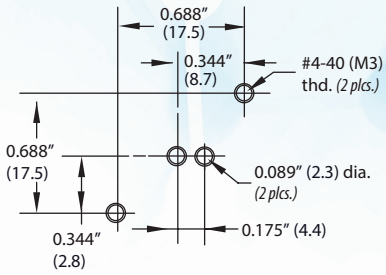

Dimensions shown are in inches (millimeters listed in parentheses).

Visit clippard.com for more detailed 2D and 3D drawings.

2-Way

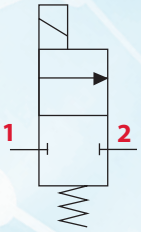

3-Way

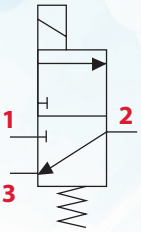

- **Ideal for ultra low leak applications**
- **No threads in flow path**
- **No anaerobic sealant**
- **Fast response**—*5 to 10 ms, nominal*
- **Close mounting**—*7/8" (22) on center, <1" (25.4) tall*

ORDERING INFORMATION

❑ E S ❑ - ❑ ❑ - ❑ ❑ ❑

Type

(blank)	Normally-closed
0	Universally-ported

Function

2	2-Way
3	3-Way

Voltage

6
12
24

Seals

(blank)	Nitrile
-V	FKM
-E	EPDM

Units

(blank)	Imperial
M-	Metric

Connection

T	Top terminal pin
W	Radial wire leads

Pressure Range

(blank)	Vac. to 105 psig, 17 l/min @ 100 psig *(7 bar max.)*
-L	Vac. to 50 psig, 14 l/min @ 50 psig *(1.7 bar max.)*
-H	Vac. to 25 psig, 12.5 l/min @ 25 psig *(3.4 bar max.)*

ACCESSORIES

C3-RXB18	Wire lead connector, 18" (457 mm), *TE Connectivity #5-103956-2*
ESM-CP	Cover plate for unused manifold station

MANIFOLDS

26090-1	Single-Station, Side Port
26090-2	Single-Station, Bottom Port
26090-3	Double-Station

More manifolds available online

Example Part Number:
ES-2T-6

For more info, scan the QR code or visit ***clippard.com/link/es-series***

EHS SERIES HIGH PRESSURE VALVES



The EHS series is precision-engineered to deliver robust performance in higher pressure (up to 1,000 psig) applications, prioritizing both safe functionality and the reduction of potential leak points. Building upon the foundation set by the ES series, the EHS incorporates key features such as substantial cross sectional o-rings, proven poppet designs, and strategic placement of mounting hardware outside the flow path. The EHS series is the preferred choice for high-pressure applications that demand lasting, low leak performance.

TYPICAL FLOW

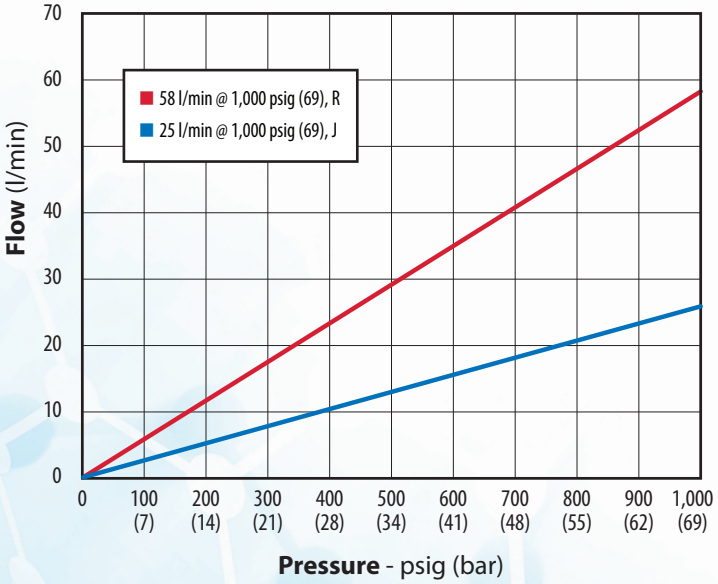

Coil Resistance	144 (12V), 576 (24V)
Connection	Top terminal pins or radial wire leads (18")
Current	0.083A (12V), 0.042A (24V)
Filtration	40 micron (recommended)
Function	2-way normally-closed (monodirectional)
Material, Body	ENP steel, stainless steel, aluminum
Material, Seals	Nitrile standard; FKM and EPDM available
Material, Spring	Nickel alloy
Material, Wetted	Nickel alloy, stainless steel, ENP steel, aluminum
Max. Flow	25 or 58 l/min @ 1,000 psig (69 bar)
Max. psig	1,000 psig (69 bar)
Medium	Clean, dry air and compatible gases
Mount	Inline
Number of Ports	2
Operating Pressure	Vac. to 1,000 psig (69 bar)
Operating Temp. Range	32 to 150˚F (0 to 65˚C)
Port, Inlet	1/8-27 NPT female or G1/8 female
Port, Outlet	1/8-27 NPT female or G1/8 female
Response Time	10 to 15 ms (nominal)
Voltage	12 or 24 VDC
Voltage Operating Range	90 to 120%
Wattage	1 Watt (nominal)
More Details	clippard.com/link/ehs

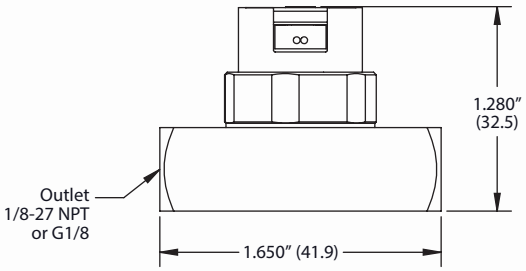

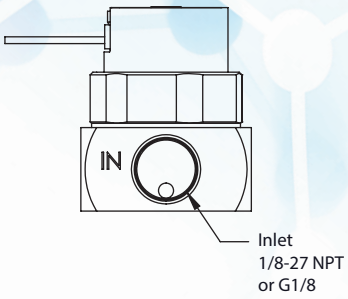

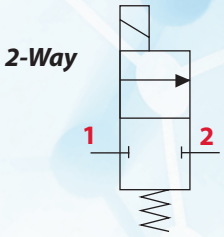

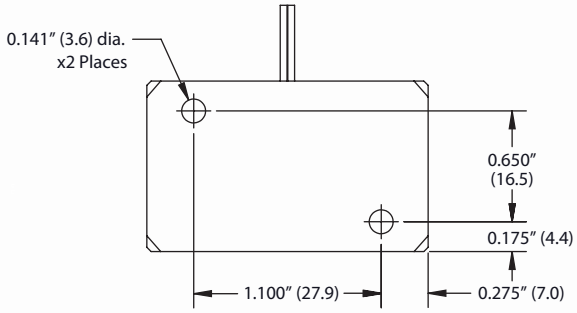

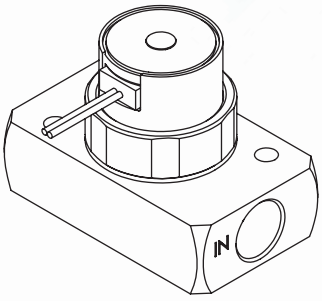

Dimensions shown are in inches (millimeters listed in parentheses). Visit clippard.com for more detailed 2D and 3D drawings.

- **Specially engineered for reliability in demanding high-pressure applications** (up to 1,000 psig)
- **Easy installation and maintenance**
- **Proven poppet design**
- **Compact, space-saving design with optimized flow path**

ORDERING INFORMATION

❑ E H S - 2 ❑ - ❑ - ❑ ❑

Units

(blank)	Imperial
M-	Metric

Connection

T	Top terminal pin
W	Radial wire leads

Voltage

12	
24	

Max. Flow

R	58 l/min @ 1,000 psig *(69 bar max.)*
J	25 l/min @ 1,000 psig *(69 bar max.)*

Seals

(blank)	Nitrile
-V	FKM
-E	EPDM

ACCESSORIES

C3-RXB18	Wire lead connector, 18" *(TE Connectivity #5-103956-2)*

Example Part Number:
EHS-2T-12-R

For more info, scan the QR code or visit ***clippard.com/link/ehs***

SV SERIES ELECTRONIC VALVES



These direct actuating valves offer an extremely fast response time for accurate dosing of minute volumes. Due to very low moving weights, they are extremely quiet and emit very low vibration. Subminiature size and low energy consumption make them ideal for transportable and mobile systems, among others.

Standard products offered will fit the needs of most applications, however this series can be fully customized according to the user's unique requirements. Consult Clippard with your specific application.

Connection	3" wire leads
Cycle Life	>100,000,000
Filtration	10 micron *(recommended)*
Function	2-way or 3-way, normally-closed
Leak Rate	1.0 sccm
Material, Body	Stainless steel
Material, Seals	FKM standard, EPDM available[1]
Material, Spring	302 stainless steel
Material, Wetted	303, 430, and 302 stainless steel
Max. Flow	7 l/min @ 145 psig (10 bar), 14 l/min @ 115 psig (8 bar), 12.5 l/min @ 72 psig (5 bar), 13 l/min @ 45 psig (3 bar)
Max. psig	145 (10 bar)
Medium	Air, water, gas, and compatible fluids
Mount	Cartridge
Number of Ports	2 or 3
Operating Pressure	0 to 145 psig (10 bar)
Operating Temperature	41 to 122˚F (5 to 50˚C)
Orifice	0.012", 0.020", 0.031", 0.039" (0.3, 0.5, 0.8, 1.0 mm)
Port, Exhaust	M1.6
Port, Inlet	No thread
Port, Outlet	No thread
Response Time	<5 ms
Voltage	12 or 24 VDC
Voltage Operating Range	95-105% of rated power
Wattage	0.5 to 1.2 watts
More Details	clippard.com/link/sv-series

[1]*Minimum order quantity required*

TYPICAL FLOW

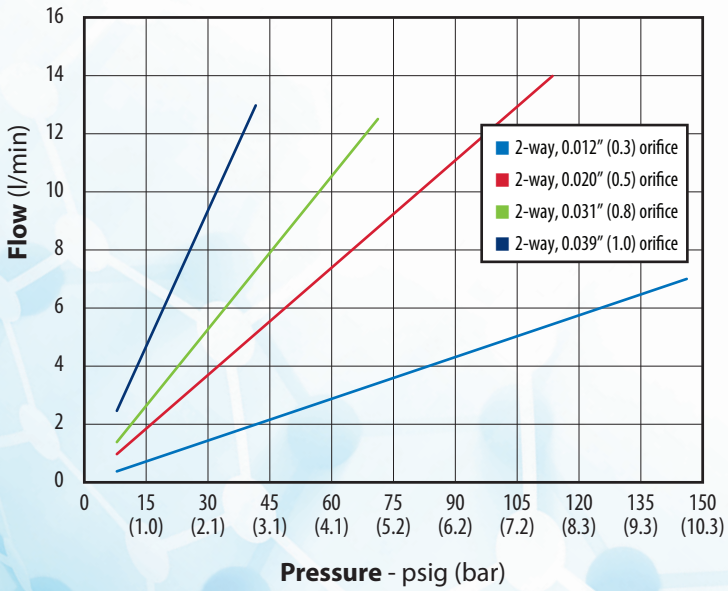

Does your application have requirements beyond what is listed? Contact Clippard to discuss how this valve can be modified to meet your specific needs.



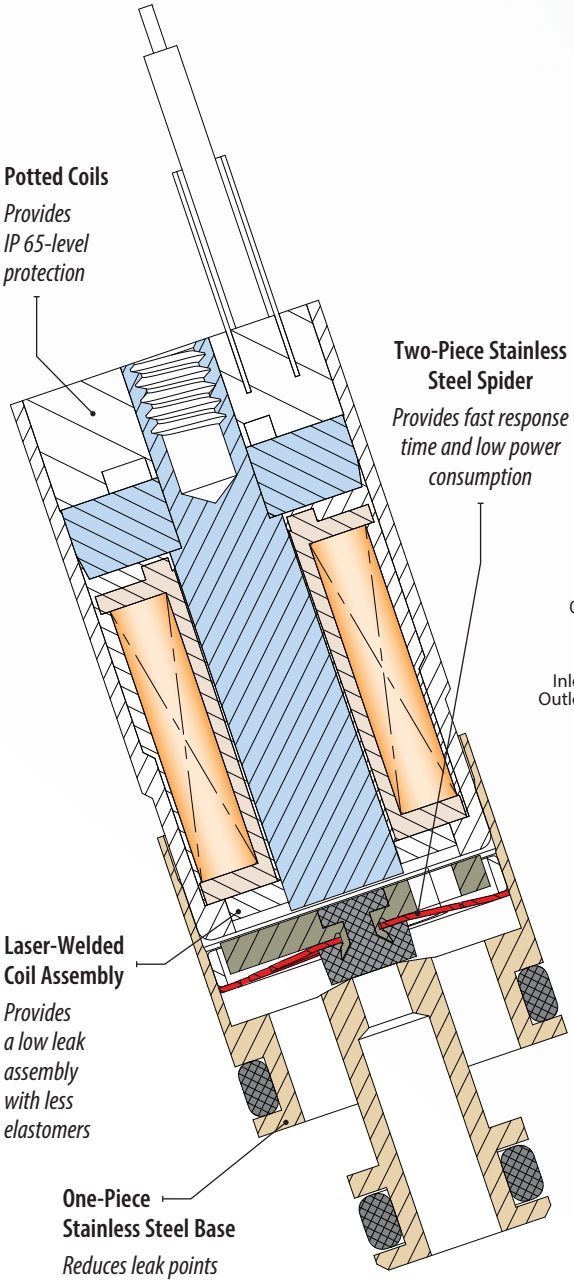

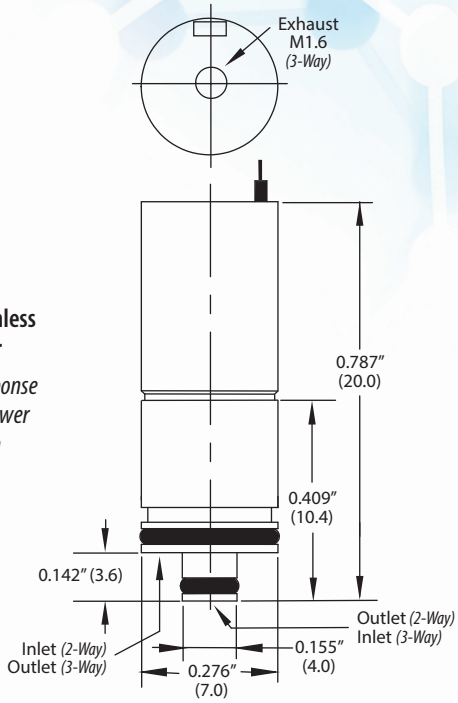

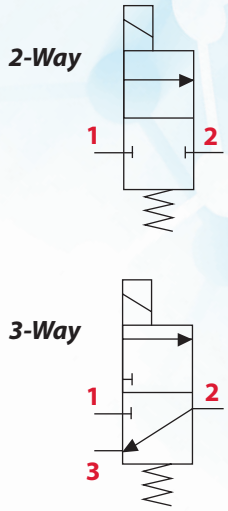

Dimensions shown are in inches (millimeters in parentheses). Visit clippard.com for more detailed 2D and 3D drawings.

- Extremely small dead volume
- Low vibration and noise
- Fast response time
- Low energy consumption
- Exceptional repeatability and reliability
- Compact and ideal for sub-assemblies
- 100% tested
- Serialized production cell

ORDERING INFORMATION

S V - ❑ C - ❑ - ❑ - ❑

Function

2	2-way
3	3-way

Voltage

12
24

Pressure Range

3	0.012" orifice—*2-way & 3-way: 0 to 145 psig (10 bar)*
5	0.020" orifice—*2-way: 0 to 116 psig (8 bar); 3-way: 0 to 87 psig (6 bar)*
8	0.031" orifice—*2-way: 0 to 73 psig (5 bar); 3-way: 0 to 36 psig (2.5 bar)*
10	0.039" orifice—*2-way: 0 to 45 psig (3 bar); 3-way: 0 to 22 psig (1.5 bar)*

Seals

V	FKM
E	EPDM

Some configurations may not be valid or may have minimum order quantities. Consult the online configurator at clippard.com for more details.

ACCESSORIES

SVM-01*	Single-station manifold, #10-32
M-SVM-01*	Single-station manifold, M5
SVM-MC	Mounting clip & screw

**Also available in stainless steel (add -SS to part number)*

Example Part Number:
SV-2C-12-3-V

For more info, scan the QR code or visit ***clippard.com/link/sv-series***

ST SERIES ELECTRONIC VALVES



These direct actuating valves offer an extremely fast response time for accurate dosing of minute volumes in a compact, 8 mm cartridge package. Due to very low moving weights, they are extremely quiet and emit very low vibration. Subminiature size and low energy consumption make them ideal for many medical and diagnostic applications. Standard products offered will fit the needs of most applications, however this series can be fully customized according to the user's unique requirements. Consult Clippard with your specific application.

Connection	Terminal pins
Cycle Life	>100,000,000
Filtration	10 micron *(recommended)*
Function	3-way
Leak Rate	1.0 sccm
Material, Body	Stainless steel
Material, Seals	FKM standard, EPDM available[1]
Material, Spring	302 stainless steel
Material, Wetted	302 stainless steel
Max. Flow	7.5 l/min @ 145 psig (10 bar), 11.7 l/min @ 87 psig (6 bar), 16.7 l/min @ 45 psig (3 bar)
Max. psig	145 (10 bar)
Medium	Air, water, gas, and compatible fluids
Mount	Cartridge
Number of Ports	3
Operating Pressure	0 to 29 psig (2 bar) to 0 to 145 psig (10 bar)
Operating Temperature	41 to 122˚F (5 to 50˚C)
Orifice	0.012" (0.3 mm), 0.017" (0.5 mm), 0.020" (0.8 mm), 0.031" (1.0 mm), 0.047" (1.2 mm)
Port, Exhaust	No thread
Port, Inlet	No thread
Port, Outlet	No thread
Response Time	<10 ms
Voltage	12 or 24 VDC
Voltage Operating Range	95-105% of rated power
Wattage	0.5 to 1.0 watts
More Details	clippard.com/link/st-series

[1]*Minimum order quantity required*

Does your application have requirements beyond what is listed? Contact Clippard to discuss how this valve can be modified to meet your specific needs.

TYPICAL FLOW

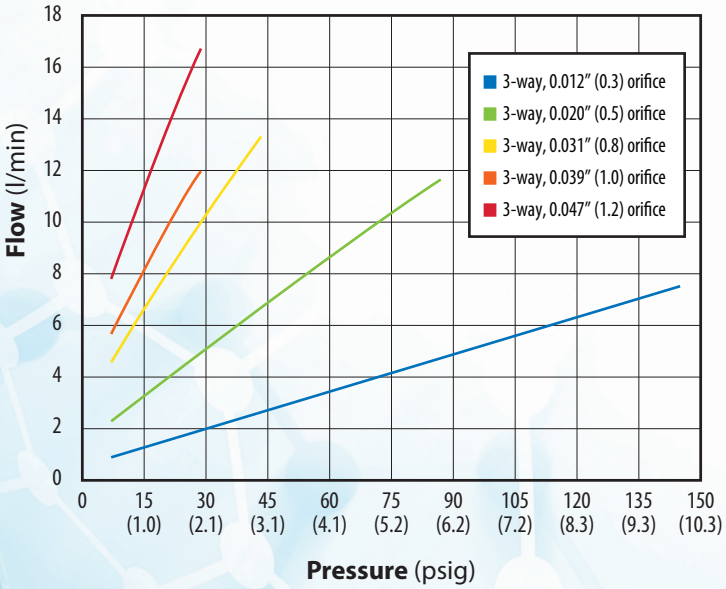



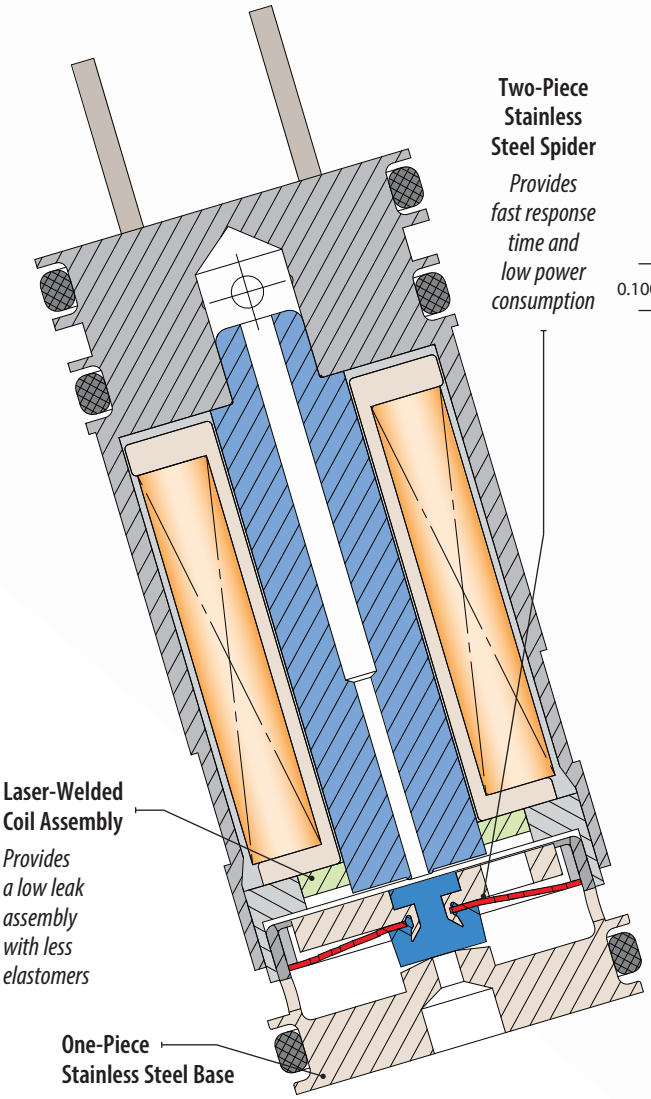

Two-Piece Stainless Steel Spider
Provides fast response time and low power consumption

Laser-Welded Coil Assembly
Provides a low leak assembly with less elastomers

One-Piece Stainless Steel Base
Reduces leak points

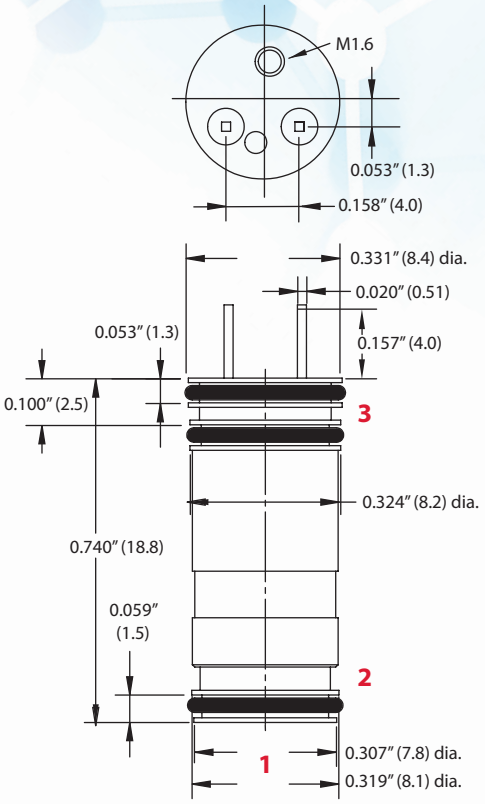

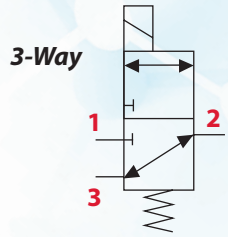

Dimensions shown are in inches (millimeters in parentheses).

Visit clippard.com for more detailed 2D and 3D drawings.

- Extremely small dead volume
- Low vibration and noise
- Fast response time
- Low energy consumption
- Exceptional repeatability and reliability
- Compact and ideal for sub-assemblies
- 100% tested
- Serialized production cell

ORDERING INFORMATION

S T - 3 C - ❑ - ❑ - ❑

Voltage

12	
24	

Pressure Range

3	0.012" orifice—*0 to 145 psig (10 bar)*
5	0.020" orifice—*2-way: 0 to 87 psig (6 bar)*
8	0.031" orifice—*2-way: 0 to 44 psig (3 bar)*
10	0.039" orifice—*0 to 29 psig (2 bar)*
12	0.047" orifice—*0 to 29 psig (2 bar)*

Seals

V	FKM
E	EPDM

Some configurations may not be valid or may have minimum order quantities. Consult the online configurator at clippard.com for more details.

ACCESSORIES

STM-01*	Single-station manifold, #10-32
M-STM-01*	Single-station manifold, M5

**Also available in stainless steel (add -SS to part number)*

Example Part Number:
ST-3C-12-3-V

For more info, scan the QR code or visit ***clippard.com/link/st-series***

DV SERIES ELECTRONIC VALVES



Clippard electronic valves are precision-built control valves utilizing Clippard's patented valving principle. The powerful DV Series was designed as the next generation of the well-known and trusted original EV line of Clippard spider valves. With a cycle life of over a billion, a solid, compact design, and extremely high flow rates, these valves are suitable for many applications across numerous diverse industries. A variety of voltage, connector and mounting options are available.

TYPICAL FLOW

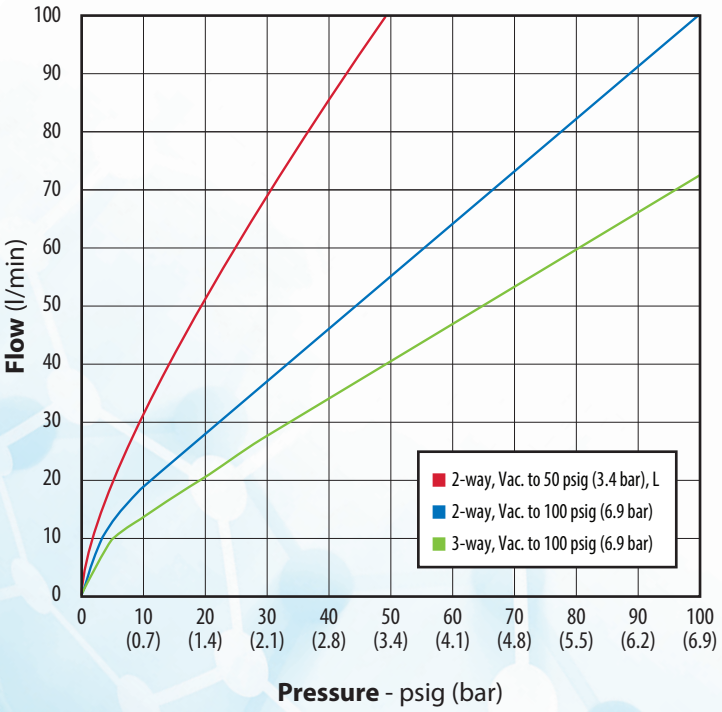

Coil Resistance	76 (12V), 304 (24V)
Connection	Spade terminals or wire leads
Cycle Life	750 million
Filtration *(recommended)*	40 micron
Function	2-way or 3-way normally-closed or normally-open; 3-way universally ported
Material, Body	Stainless steel
Material, Seals	Nitrile standard; FKM, EPDM and silicone available
Material, Spring	Stainless steel
Material, Wetted	Polyetherimide, stainless steel, PPS
Max. Flow	100 l/min @ 50 or 100 psig (3.4 or 7 bar), 70 l/min @ 100 psig (7 bar)
Max. psig	100 (6.9 bar)
Medium	Compatible fluids and gases
Mount	In-line, manifold, or cartridge *(inserts into 3/4" bore)*
Number of Ports	2 or 3
Operating Pressure	28" (71 cm) Hg vac. to 50 or 100 psig (3.4 or 7 bar)
Operating Temp. Range	32 to 130˚F (0 to 54˚C)
Orifice	0.044", 0.052", 0.070" (1.1, 1.3, 1.8 mm)
Port, Exhaust	**3-Way:** #10-32 or M5
Port, Inlet	**Manifold:** #10-32 male or M5 **Inline:** 1/8" NPT or BSPT female
Port, Outlet	**Manifold:** No thread **Inline:** 1/8" NPT or BSPT female
Response Time	10 to 20 ms
Voltage	12 or 24 VDC
Voltage Operating Range	95 to 125% of rated power
Wattage	1.9 watts
More Details	**clippard.com/link/dv-series**

[1]*Minimum order quantity required*

Does your application have requirements beyond what is listed? Contact Clippard to discuss how this valve can be modified to meet your specific needs.

Spade Terminals In-Line Manifold

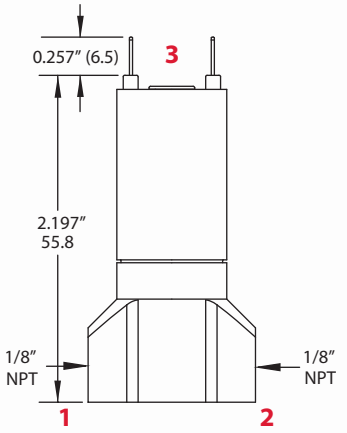

Wire Leads In-Line Manifold

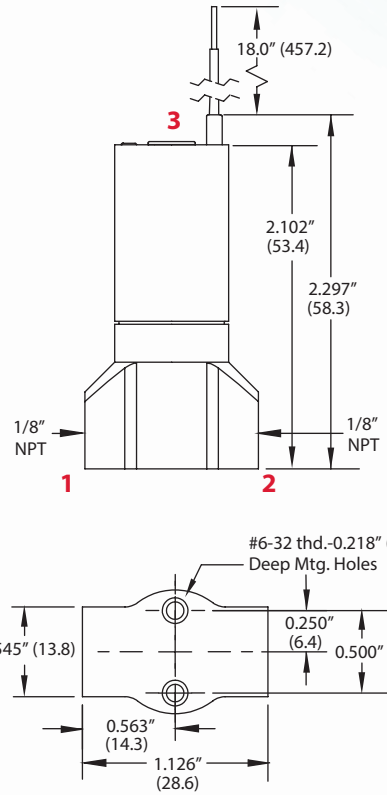

Spade Terminals Cartridge Style

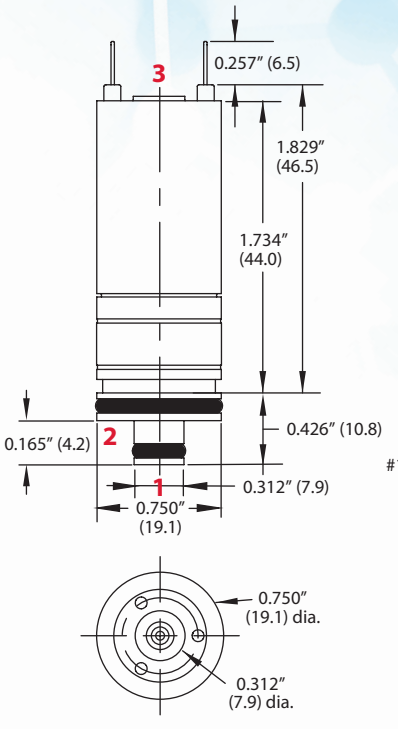

Wire Leads Manifold Mount

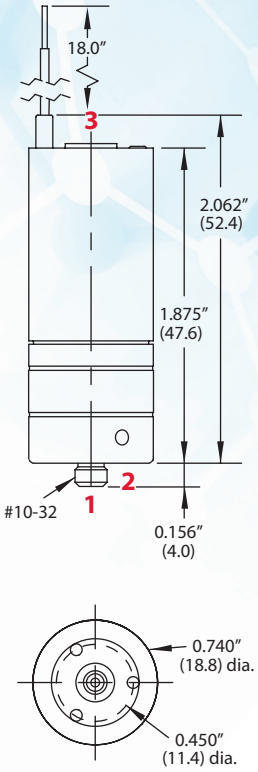

Dimensions shown are in inches. Visit clippard.com for more detailed 2D and 3D drawings.



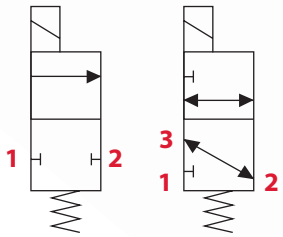

- Large flows in small, sleek package
- Low heat rise, low power
- Robust stainless steel "spider" armature spring

ORDERING INFORMATION

❑ **D** ❑ - ❑ ❑ - ❑ ❑ ❑

Units

(blank)	Imperial
M-	Metric

Connection

T	Spade Terminals
V	Wire Leads

Function

2	2-way
3	3-way

Mount

(blank)	In-Line
M	Manifold
C	Cartridge

Voltage

12	12 VDC
24	24 VDC

Pressure

(blank)	Vac. to 100 psig (7 bar)
-L	Vac. to 50 psig (3.4 bar), *2-way only*

Seals

(blank)	Nitrile
-V	FKM
-E	EPDM

Example Part Number:
DT-2-12

For more info, scan the QR code or visit ***clippard.com/link/dv-series***

PRECISION ORIFICE FITTINGS



Filtration	5 micron filter *(recommended)*
Materials, Wetted	Stainless steel, FKM, and ruby or sapphire
Media	Air, liquid, and compatible gases
Mounting	Cartridge or in-line
Orifice	0.001" to 0.010" (0.03 to 0.25 mm)
Pressure, Max.	500 psig
Temperature Range	-20 to 400˚F (-29 to 204˚C)
Thread	#10-32 or M5
Tolerance	±0.0001" (0.0025 mm)
More Details	clippard.com/link/pof

With tolerances of ±0.0001" (0.0025 mm), Clippard's precision orifice fittings are engineered for applications where minute flow adjustments are critical. Whether optimizing fuel injection in aerospace applications or fine-tuning fluid dynamics in industrial processes, or ensuring precise dosages in medical, analytical, and life science applications, these meticulously manufactured orifice fittings enable you to achieve the ultra-precise flow control your systems demand.

- **Exceptional precision for unparalleled accuracy**
- **Tolerances of ±0.0001" (0.0025 mm)**
- **Seamlessly integrates into existing systems**
- **Orifice calibration available**

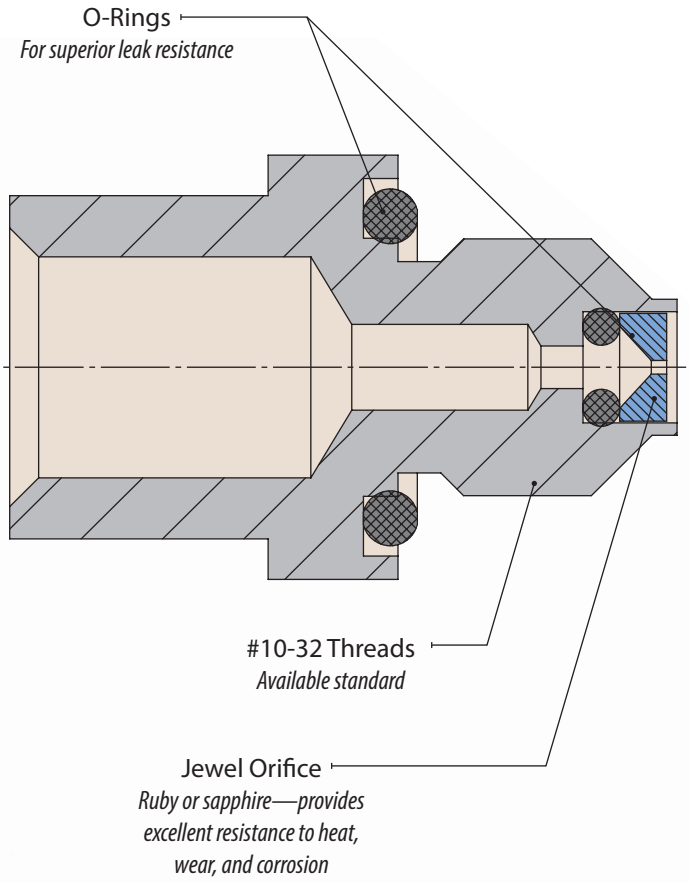

Applications

- Precision flow control of gases or liquids
- Fuel injection systems
- Dynamic industrial fluid processes
- Pneumatic or hydraulic circuits requiring accurate timing
- Precision dosing for medical, analytical, and life science
- Ultra high pressure waterjet
- Liquid and gas control units
- Flow meters
- Inkjet printing

TYPICAL FLOW

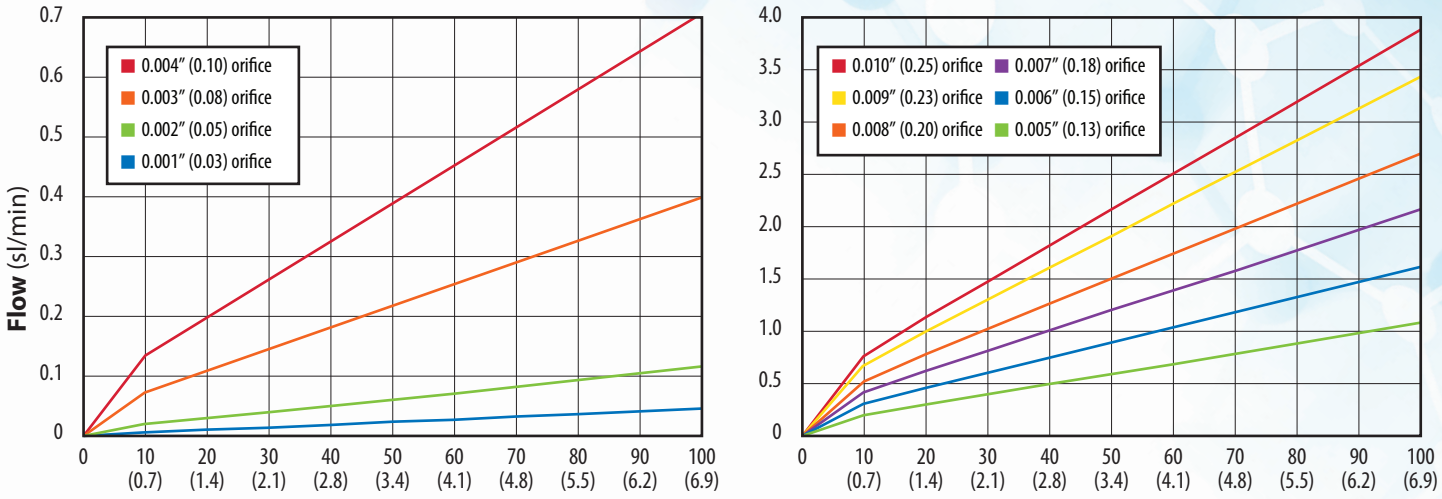

Cartridge

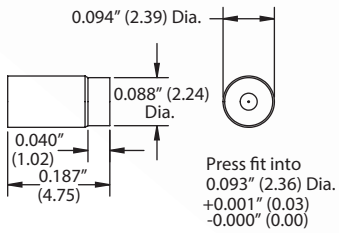

Male

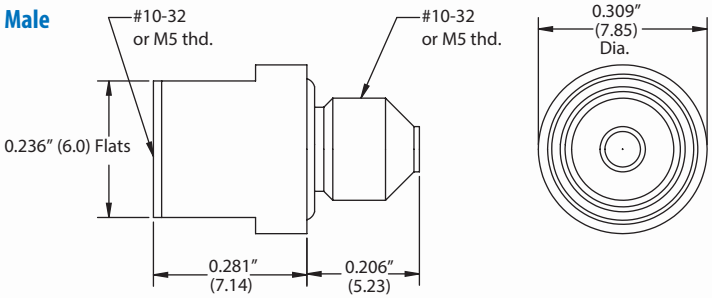

Female

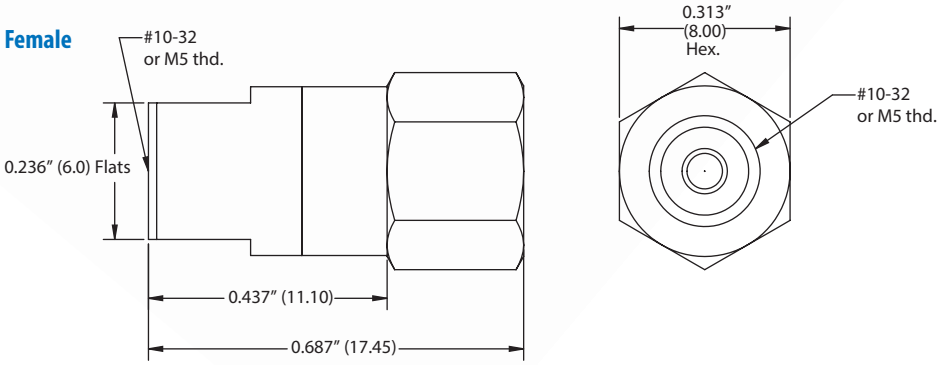

Dimensions shown are in inches (millimeters listed in parentheses).

Visit clippard.com for more detailed 2D and 3D drawings.

ORDERING INFORMATION

❑ - F O - ❑ - ❑

Units

(blank)	Imperial
M-	Metric

Orifice

001	0.001" (0.03 mm) orifice	006	0.006" (0.15 mm) orifice
002	0.0017" (0.043 mm) orifice	007	0.007" (0.18 mm) orifice
003	0.003" (0.08 mm) orifice	008	0.008" (0.20 mm) orifice
004	0.004" (0.10 mm) orifice	009	0.009" (0.23 mm) orifice
005	0.005" (0.13 mm) orifice	010	0.010" (0.25 mm) orifice

Mounting

F	Female
M	Male
C	Cartridge

Example Part Number:
FO-001-F

Contact Clippard for custom flow calibrations or to discuss other orifices, from 0.011" to 0.050" (0.28 to 1.27 mm).

For more info, scan the QR code or visit ***clippard.com/link/pof***

MANIFOLDS & ACCESSORIES

MANIFOLDS

Valve	Description		Part No.
EV	*Black anodized aluminum*	Single-Sided, 2-Station	15481-2
		Single-Sided, 4-Station	15481-4
		Single-Sided, 6-Station	15481-6
		Double-Sided, 8-Station	15482-8
		Double-Sided, 12-Station	15482-12
	Specialized *(also available in ENP brass and oxygen clean)*	#10-32 Inlet, 1/8" NPT Outlet	15490-1
		1/8" NPT Inlet, #10-32 Outlet	15490-2
		Dual Outlet—1/8" NPT Inlet, #10-32 Outlet	15490-3
		#10-32 Inlet, 1/8" NPT Outlet	15491-1
		1/8" NPT Inlet, #10-32 Outlet	15491-2
		#10-32 Inlet, #10-32 Outlet	15490-4
		1/8" NPT Inlet, 1/8" NPT Outlet	15490-5
ES	*Black anodized aluminum*	Single-Station, Side Port	26090-1
		Single-Station, Bottom Port	26090-2
		Double-Station	26090-3
		Dual Mount Single-Sided, 4-Station	26081-4
		Dual Mount Single-Sided, 6-Station	26081-6
		Dual Mount Single-Sided, 8-Station	26081-8
		Dual Mount Double-Sided, 12-Station	26082-12
		Dual Mount Double-Sided, 16-Station	26082-16
SV	*Black anodized aluminum*	Single-station manifold, #10-32	SVM-01
		Single-station manifold, M5	M-SVM-01
	Stainless steel	Single-station manifold, #10-32	SVM-01-SS
		Single-station manifold, M5	M-SVM-01-SS
ST	*Black anodized aluminum*	Single-station manifold, #10-32	STM-01
		Single-station manifold, M5	M-STM-01
	Stainless steel	Single-station manifold, #10-32	STM-01-SS
		Single-station manifold, M5	M-STM-01-SS
DV	*Black anodized aluminum*	2-Station, 1/8" NPT	15781-2
		4-Station, 1/8" NPT	15781-4
		6-Station, 1/8" NPT	15781-6
	ENP brass (other materials also avaiable)	Manifold Mount	15490-5
		Cartridge Manifold	15490-1

ACCESSORIES

Description	Part No.
Connector for ET Valve, 48"	ET-C48
Connector for ET Valve, 120"	ET-C120
Connector for EC & ET Valves, 18"	C2-RB18
Connector for EC & EI Valves, 120"	C2-RB120
Wire lead connector, 18" *(TE Connectivity #5-103956-2)*	C3-RXB18
Mounting clip & screw	SVM-MC

Special Cleaning Capabilities

Valves intended for laboratories and other low-leak, high precision environments often require higher quality cleaning and handling to limit contamination. To accommodate this, Clippard's **Analytical Series** electronic valves are designed with special cleaning and assembly standards.

Similarly, valves intended for use in oxygen-rich environments also have special requirements. Due to the high flammability of oxygen, parts used in oxygen-rich environments are extremely sensitive to contamination. To accommodate this, Clippard's **Oxygen-Clean Series** electronic valves include strict cleaning standards to meet these requirements.





Do you have an application which requires special cleaning for its manufacture, assembly or testing? Clippard is able to provide a wide range of special cleaning, inspection, and testing options for components or assemblies.

Call 877-245-6247 today to discuss how we can accommodate your unique needs.

		Analytical	Oxygen Clean	Specials
Valves	Designed with reduced leak paths	✓		✓
	Ultrasonically cleaned, assembled, inspected, and tested in a clean room	✓	✓	✓
	No organic sealants, adhesives, or lubricants are used in the manufacturing process		✓	✓
Seals	Cleaned ultrasonically with high purity alcohol	✓		✓
	Heated to outgas before assembly	✓	✓	✓
Inspection	Cleaned parts inspected under white and ultraviolet light to insure the absence of particulate and hydrocarbon contamination	✓	✓	✓
Lubricants	Isopropyl alcohol, only as needed for assembly	✓		✓
	Oxygen compatible PFPE grease, only as needed for assembly		✓	✓
Testing	Valves are tested using high purity compressed nitrogen in place of shop air	✓	✓	✓
	Valves are pressure decay leak tested	✓		✓
	Helium leak testing for ultra low leak requirements			✓
Packaging	Finished valves are double bagged in heat sealed polyethylene bags to ensure cleanliness	✓	✓	✓

Clippard products are distributed through our worldwide network of sales and engineering specialists. All of our representatives are stocking distributors and keep a variety of Clippard products on hand to fill your immediate needs. Each of our distributors are backed by our own large inventory to ensure quick delivery.

To locate your nearest distributor, call 877-245-6247 or visit **clippard.com/distributors**



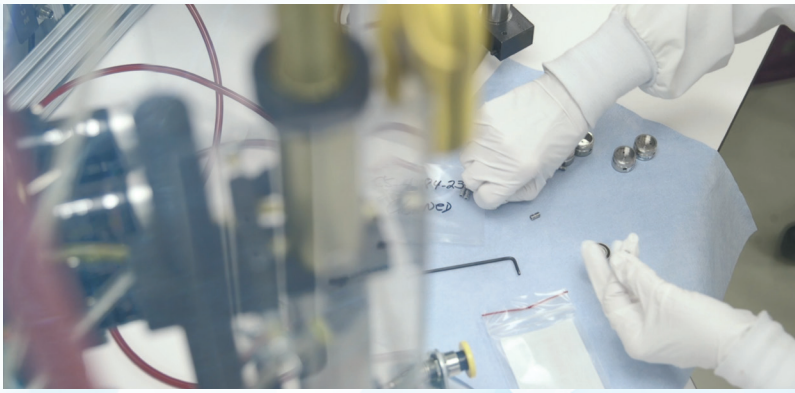

- ELECTRONIC VALVES
- PROPORTIONAL VALVES
- ISOLATION VALVES
- ELECTRONIC CONTROLS
- CUSTOM SOLUTIONS
- PRESSURE REGULATORS
- CONTROL VALVES
- DIRECTIONAL CONTROL VALVES
- AIR PILOT VALVES
- AIR PREPARATION EQUIPMENT
- FITTINGS, HOSE, & TUBING

Scan QR code or visit clippard.com/link/request-literature to request additional literature.

Clippard

United States
1-877-245-6247

Europe
+32 10-45-21-34

China
+86 137-9527-9010

DISTRIBUTED BY:

BRO-SPIDER-02, Rev. 031425